New Product Introduction November 2026



MICROCONTROLLER

PSOC™ Control C3 Main Line PSC3M/P6 for motor control and power conversion applications

POWER

HybridPACK™ HD – FF01MR14A60MA2XT a game-changing power module for eTruck drivetrain inverters

OptiMOS™ 7 switching-optimized power MOSFETs in 40 V for AI servers, datacenters and telecom

TRENCHSTOP™ IGBT7 modules - 62 mm 1200 V with tvj op = 175°C for ESS and SOLAR

EiceDRIVER™ IRS2136xDSTRPBF 600 V, 3-phase gate driver IC for motor drive applications

EVALUATION BOARDS

Solid State Isolators Evaluation Boards EVAL_ISSI20BxxF

TOOLS

ModusToolbox™ AI Assistant - hardware-aware intelligence for your AI coding experience

Classification: Restricted document! The information presented is valid from November 1st 2026. Please check the latest Distribution Price Book for current prices and minimum quantities.

PSOC™ Control C3 Main Line PSC3M/P6 for motor control and power conversion applications

PSOC™ Control family of MCUs is specifically enhanced for motor control and power conversion applications. This family of high-performance Arm® Cortex®- M33 MCUs enables designers to innovate, solve complex design problems and get their products to market faster than ever before. Typical applications include quad-motor control, PFC, aircon drives and compressors, SMPS, solar inverters, robotics, and industrial drives extending to datacenter and medical applications due to additional functionality and security features.



Features

- 180 MHz Arm® Cortex®-M33 with DSP/FPU
- Up to 512 KB Flash with ECC, 128 KB ECC SRAM
- 16 kB I-Cache and 6 power modes
- USB-FS and I3C connectivity
- 12-bit 9-MSPS ADC with up to 24 analog channels (16 S/H)
- Rich analog integration: DACs, OpAmps and comparators
- Advanced real-time control with HRPWM and CORDIC
- Up to PSA L3 and DICE ready with PQC support
- Industrial temperature range: -40°C to 115°C

Benefits

- Additional fast analog and digital peripherals for wide-bandgap systems
- HW accelerators (CORDIC, 3P3Z filters) for boosted task execution
- Motor and Power Suite with multi-functional GUI, dedicated tools, advanced libraries, etc.
- DEEPCRAFT™ AI Studio and ModusToolbox™ AI Assistant for easy migration from competitors to our MCUs
- Efficiently drive up to 4 motors in sensored and sensorless configuration with one MCU

Competitive advantage

- Excellent price-performance ratio for quad-motor control
- Getting started easily by ModusToolbox™ Motor Suite
- Highly efficient field-oriented control (FOC)
- Flexible motor and power algorithm support
- 15-year longevity via Infineon's longevity program
- Up to PSA L3 for compliance to different security standards including the Cyper Resiliance Act (CRA)

Target applications

- Motor control: HVAC, home appliances, industrial drives, robots, drones and LEVs
- Power conversion: power supply, solar inverter
- General purpose: datacenter, smart inhaler, medical tools, etc.

Product collaterals/online support

Product page

Block diagram

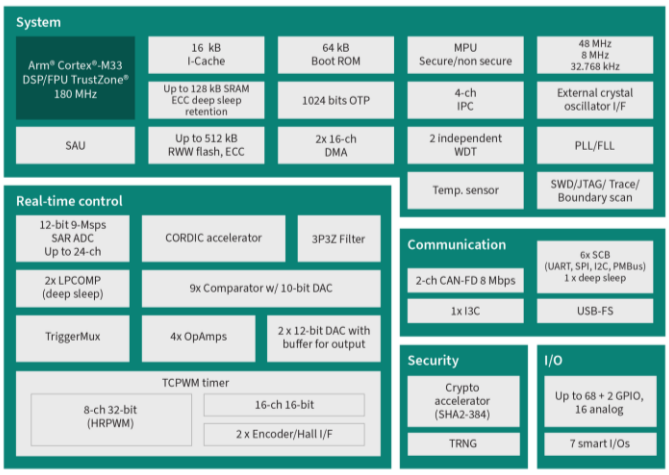

Product overview incl. datasheet link

OPN	SP Number	Package
PSC3M6GES3ACQ1XQSA1	SP006198470	PG-LQFP-64
PSC3M6GES3AHQ1XQSA1	SP006198512	PG-LQFP-100
KITPSC3M6EVALTOBO1	SP006280735	LG-MADK-1
KITPSC3M6CC2TOBO1	SP006311037	LG-MADK-1

Classification: Restricted document! The information presented is valid from November 1st 2026. Please check the latest Distribution Price Book for current prices and minimum quantities.

HybridPACK™ HD – FF01MR14A60MA2XT a game-changing power module for eTruck drivetrain inverters

HybridPACK™ HD, designed to meet the demanding requirements of eCAV. With a focus on high lifetime reliability and lower Total Cost of Ownership, this module enables an output RMS current of up to 1200 A, while ensuring > 1.2 million km lifetime requirements. Leveraging Infineon's flagship. XT joining technology and 1400 V CoolSiC™, the HybridPACK™ HD enables a compact and reliable inverter without paralleling of power modules.



Features

- 1400 V CoolSiC™ MOSFETs
- Fast efficient switching
- .XT high performance joining technology
- Solderless PressFit pins
- High current laser welded AC/DC tabs
- Adapted creepage and clearance distances
- Direct liquid cooled baseplate with elliptical PinFins
- Qualification acc. to AQG324, IPC9797 and ISO 16750-3 to ensure higher vibration robustness

Benefits

- High power and efficiency
- High reliability and robustness
- Excellent thermal performance
- Enables 3-phase/1 motor architecture
- Enables platform solution (500 Arms – 1200 Arms)
- Ready for the integration on e-axle
- Improved TCO: KWhr/km
- Future ready package to support higher battery voltages (up to 1500 Vdc)

Competitive advantage

- Power module HybridPACK™ HD supports:
  - Flexibility and scalability to different mission profiles w/o paralleling modules and compromising lifetime
  - E-axle integration
  - Future ready platform solution

Target applications

- Different eCAVs, such as truck, bus, construction and farming machinery

Product collaterals/online support

Product page

Block diagram

V_{DSS} = 1400 V
T_{vj} = 175°C and 200°C overload
ID = 560...700... 840 A

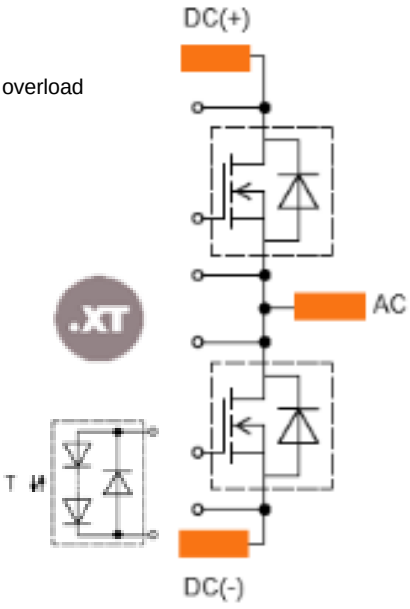

Product overview incl. datasheet link

OPN	SP Number	Package
FF01MR14A60MA2XTBPSA1	SP006086378	AG-HDOPTXT-3211

Classification: Restricted document! The information presented is valid from November 1st 2026. Please check the latest Distribution Price Book for current prices and minimum quantities.

OptiMOS™ 7 switching-optimized power MOSFETs in 40 V for AI servers, datacenters and telecom

The OptiMOS™ 7 switching-optimized power MOSFET family in 40 V balances $R_{DS(on)}$, Q_{oss} and Q_g for high-frequency DC-DC conversion. Optimized for 5 V gate drive and GaN-compatible ecosystems, the 40 V family combines ultra-low on-resistance with source-down and dual-side-cooling packages to improve efficiency, thermal performance and power density.

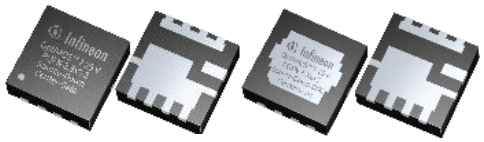

Features

- 40 V N-channel OptiMOS™ 7 switching-optimized technology
- Balanced $R_{DS(on)}$, Q_{oss} and Q_g for high-frequency DC-DC conversion
- Up to 33% lower $R_{DS(on)}$ and up to 40% improved FOMs vs. OptiMOS™ 6
- 5 V gate-drive optimized, logic level
- Flat $R_{DS(on)}$ characteristic with improved V_{th} margin and Miller ratio
- Source-down and dual-side-cooling package options
- Operating junction temperature up to 175°C

Benefits

- Higher current handling in smaller footprints
- Up to 5% higher output power in the 1.2 MHz ZSC benchmark
- Up to 9°C lower board temperature in the 1.2 MHz ZSC benchmark
- Lower gate-driver losses with full $R_{DS(on)}$ benefit at 5 V
- Additional PCB layout and thermal-design flexibility
- Improved ruggedness against induced turn-on and hard commutation
- 5 V gate drive compatibility (compatible with GaN)

Competitive advantage

- Switching application-centric optimization delivers a stronger balance of conduction and switching performance than the previous OptiMOS™ 6 generation. In the released application note, OptiMOS™ 7 reached 1 kW output at 97.59% peak efficiency on the 1.2 MHz ZSC benchmark; it also showed higher full-load efficiency and 42 W more maximum output power than the referenced peer device

Target applications

- AI server and datacenter power conversion
- Intermediate bus converters (IBC)
- 48 V / 12 V and 50 V / 12 V DC-DC conversion
- Server power supplies and battery backup units
- Telecom power conversion
- High-frequency soft-switching topologies: ZSC, HSC and LLC synchronous rectification

Product collaterals/online support

Product family page

Block diagram

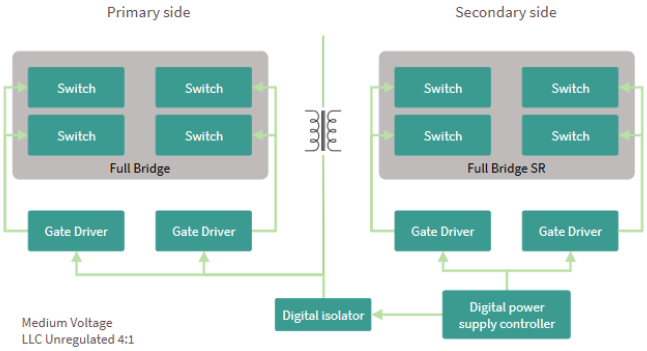

Product overview incl. datasheet link

OPN	SP Number	Package
IQE010N04LM7CGSCATMA1	SP006100401	PG-WHTFN-9
IQE010N04LM7CGATMA1	SP006107712	PG-TTFN-9
ISCH65N04LM7SCATMA1	SP006202559	PG-WSON-8
ISCH69N04LM7SCATMA1	SP006202562	PG-WSON-8
ISC011N04LM7SCATMA1	SP006202565	PG-WSON-8

Classification: Restricted document! The information presented is valid from November 1st 2026. Please check the latest Distribution Price Book for current prices and minimum quantities.

TRENCHSTOP™ IGBT7 modules - 62 mm 1200 V with tvj op = 175°C for ESS and SOLAR

The 62 mm half-bridge TRENCHSTOP™ IGBT7 modules with Tvj op 175°C as an advanced solution to maximize power density, efficiency and scalability of Energy Storage and Solar Systems. 2 new Best in Class products are available:

FF800R12KE7D_S8
FF1000R12KE7I_S8



Features

- Tvj op = 175°C
- Highest power density
- Screw power terminals
- Isolated baseplate
- 20% increased Diode / IGBT performance

Benefits

- Higher inverter output current
- Less parallelization of the modules
- Reduction of total system cost
- Reduced cooling efforts

Competitive advantage

- The new 62 mm modules allowing for higher continuous operation temperature, enabling an increase in output power

Target applications

- Energy Storage Systems
- Central Inverter Solutions
- Hydrogen

Product collaterals/online support

Product page: FF800R12KE7DS8HPSA1
Product page: FF1000R12KE7IS8HPSA1

Block diagram

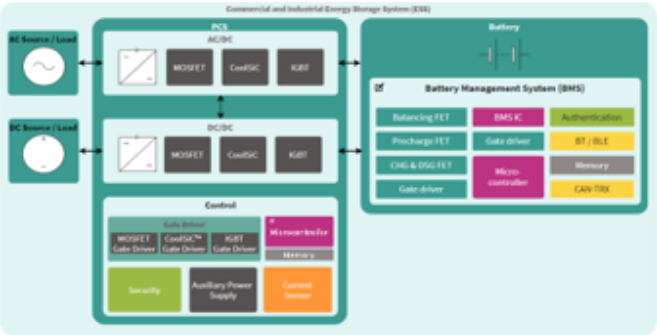

Product overview incl. datasheet link

OPN	SP Number	Package
FF800R12KE7DS8HPSA1	SP006034941	AG-62MMHB-711
FF1000R12KE7IS8HPSA1	SP006034920	AG-62MMHB-711

Classification: Restricted document! The information presented is valid from November 1st 2026. Please check the latest Distribution Price Book for current prices and minimum quantities.

EiceDRIVER™ IRS2136xDSTRPBF 600 V, 3-phase gate driver IC for motor drive applications

600 V three-phase gate driver IC designed to drive IGBTs in motor drives and inverter applications. It integrates six independent high-side and low-side gate drivers, built-in bootstrap diodes, over-current protection, under-voltage lockout, and fault reporting to enhance system reliability and simplify design. Ideal applications include home appliances, HVAC systems, pumps, fans, power tools, and general-purpose motor control systems.



Features

- 600 V three-phase gate driver for inverter and motor drive systems
- Six independent high-side and low-side gate drivers
- Integrated ultra-fast, low $R_{DS(ON)}$ bootstrap diodes
- Built-in over-current protection (OCP) with adjustable trip threshold
- Under-voltage lockout (UVLO) protection
- Integrated shoot-through prevention (cross-conduction interlock)

Benefits

- Simplifies three-phase inverter design by integrating six gate drivers and integrates bootstrap diodes and over-current protection
- Improves system reliability with built-in over-current, fault reporting, cross-conduction protection, and integrated under-voltage protection

Product collaterals/online support

Product page: IRS2136DSTRPBFXUMA2

Product page: IRS21364DSTRPBFXUMA1

Target applications

- Home appliances
- Industrial motor drives and controls
- Refrigeration compressors
- Air-conditioning
- Fans, pumps
- General-purpose inverters

Block diagram

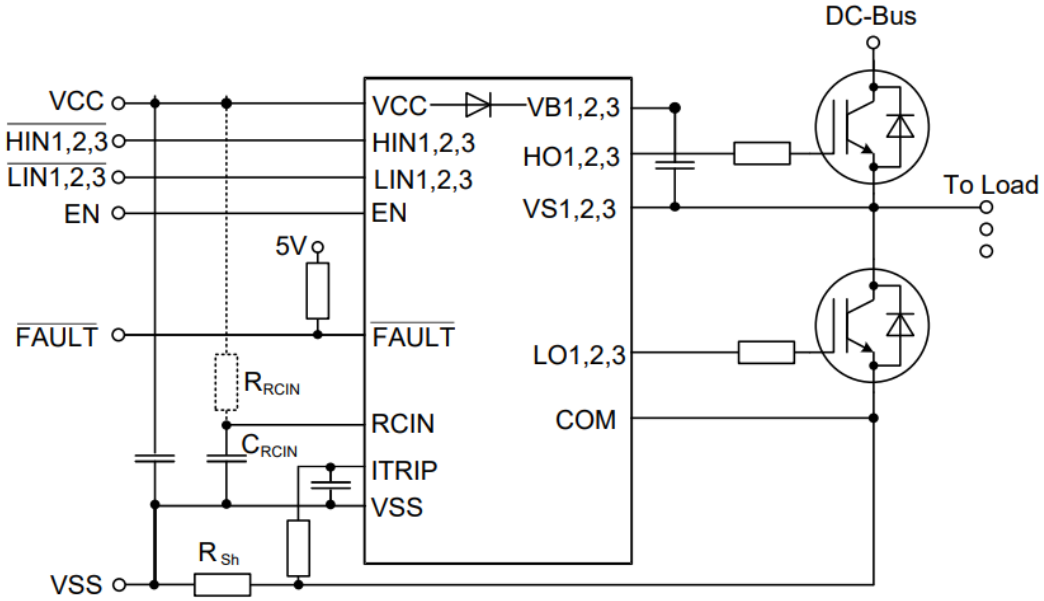

Product overview incl. datasheet link

OPN	SP Number	Package
IRS2136DSTRPBFXUMA2	SP006232760	PG-DSO-28
IRS21364DSTRPBFXUMA1	SP006282121	PG-DSO-28

Classification: Restricted document! The information presented is valid from November 1st 2026. Please check the latest Distribution Price Book for current prices and minimum quantities.

Solid State Isolators Evaluation Boards EVAL_ISSI20BxxF

Explore isolated solid-state relay designs with four evaluation boards EVAL-ISSI20B02FCS, EVAL-ISSI20B02FTS, EVAL-ISSI20B03F and EVAL-ISSI20B11F for ISSI20B02F, ISSI20B03F and ISSI20B11F. Each board combines a coreless-transformer solid-state isolator with two power MOSFETs in an AC switch configuration. Compare current-sensing and temperature-sensing protection options, standard or fast turn-on, and fast fault turn-off, without a separate isolated gate-bias supply.

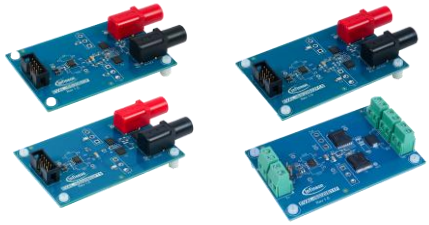

Features

- Four Evaluation boards featuring ISSI20BxxF driving two power MOSFETs in an AC switch configuration
- Higher Output Current than Photovoltaic Isolators (PVIs)
- Fast turn-off on fault detection
- Integrated Protection Features: Over-current Protection (OCP), Over-temperature protection (OTP) and Dynamic Miller clamping (DMC)
- Galvanic Isolation – Functional - UL1577

Benefits

- Evaluate isolated AC switching on assembled boards
- No separate isolated gate-bias supply needed
- Compare current and temperature protection options
- Assess fast fault turn-off and latch-off behavior
- Explore fast turn-on with the B11F board
- Use schematics, BOMs and test guidance to start designing

Competitive advantage

- Featuring coreless transformer technology based solid state isolators (ISSI20BxxF) with significantly higher output current, competitive footprint and pricing v/s PVIs, and integrated OCP, OTP, DMC - no external components, and higher reliability v/s EMR - over 1,000,000 switching cycles.
- Protection-focused board variants demonstrate different solid-state relay design approaches
- OptiMOS™ and CoolMOS™ switch implementations support hands-on evaluation
- Compare standard turn-on (ISSI20B0xF) and fast turn-on (ISSI20B11F) variants

Target applications

- BMS - Battery Disconnect in AI BBU, ESS, LEV, etc.
- Low Voltage Building Automation
- Solid State Relay (SSR) Modules
- Industrial Automation
- Programmable Logic Controllers (PLC)
- Digital input/output (I/O) Modules
- Laboratory Power Supplies
- Test and Measurement Systems
- Telecom Infrastructure

Product collaterals/online support

Board page:EVALISSI20B02FCSTOBO1
Board page:EVALISSI20B02FTSTOBO1
Board page:EVALISSI20B03FTOBO1
Board page:EVALISSI20B11FTOBO1

Block diagram

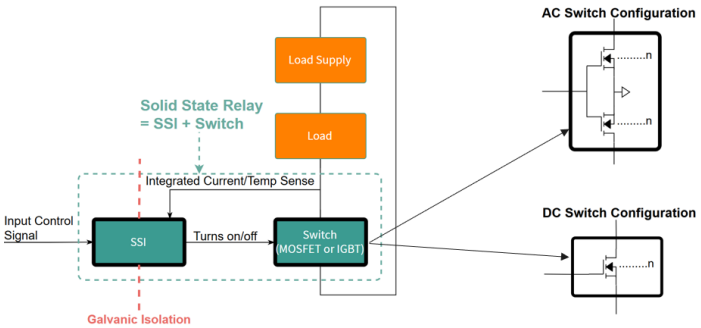

Product overview incl. user guide link

OPN	SP Number	Package
EVALISSI20B02FCSTOBO1	SP006315197	LG-MADK-1
EVALISSI20B02FTSTOBO1	SP006315202	LG-MADK-1
EVALISSI20B03FTOBO1	SP006315205	LG-MADK-1
EVALISSI20B11FTOBO1	SP006315208	LG-MADK-1

Classification: Restricted document! The information presented is valid from November 1st 2026. Please check the latest Distribution Price Book for current prices and minimum quantities.

ModusToolbox™ AI Assistant - hardware-aware intelligence for your AI coding experience

The ModusToolbox™ AI Assistant is available as a Microsoft VS Code extension and designed to work with the ModusToolbox™ for VS Code extension. This AI assistant extension brings hardware-aware intelligence to your AI coding experience. It gives GitHub Copilot a deep understanding of your ModusToolbox™ workspace. Including MCU, BSP, available libraries, and peripheral configurations, so you get relevant code that compiles.

Features

- Hardware-aware code generation
- Library- and middleware-aware suggestions
- Skill-guided workflows
- AI-assisted project creation
- AI-assisted porting
- "Add AI Enhancements" to existing projects
- In-chat tool integration
- Works with your existing AI assistant

Benefits

- Faster first-pass results
- Lower onboarding friction
- Fewer costly mistakes caught late
- No new tool to learn, work inside Copilot
- Adopt without an IT approval cycle with local MCP
- Project and code data stay on the developer's machine
- More efficient AI usage
- Smooths multi-device development

Competitive advantage

- Local-first architecture, no IT allowance required, nothing sent back to Infineon.
- Multi-assistant compatibility, no vendor lock-in.
- Deep, silicon-specific grounding.
- Native integration with the broader ModusToolbox™ development ecosystem
- Built-in porting assistance
- Supported platforms:
  - PSOC™ Edge (E84)
  - PSOC™ Control (C3)
  - PSOC™ 4 HV
  - TRAVEO™ T2G
- Supported platforms (coming soon):
  - PSOC™ 6
  - PSOC™ 4

Target applications

- Edge AI / machine learning inference
- Power conversion & energy management
- Industrial automation & motor control
- Automotive body electronics
- Human-machine interface & sensing (e.g., touch/CAPSENSE-based UI)
- General-purpose embedded control across consumer, industrial, and automotive designs

Product collaterals/online support

Product page

Block diagram

