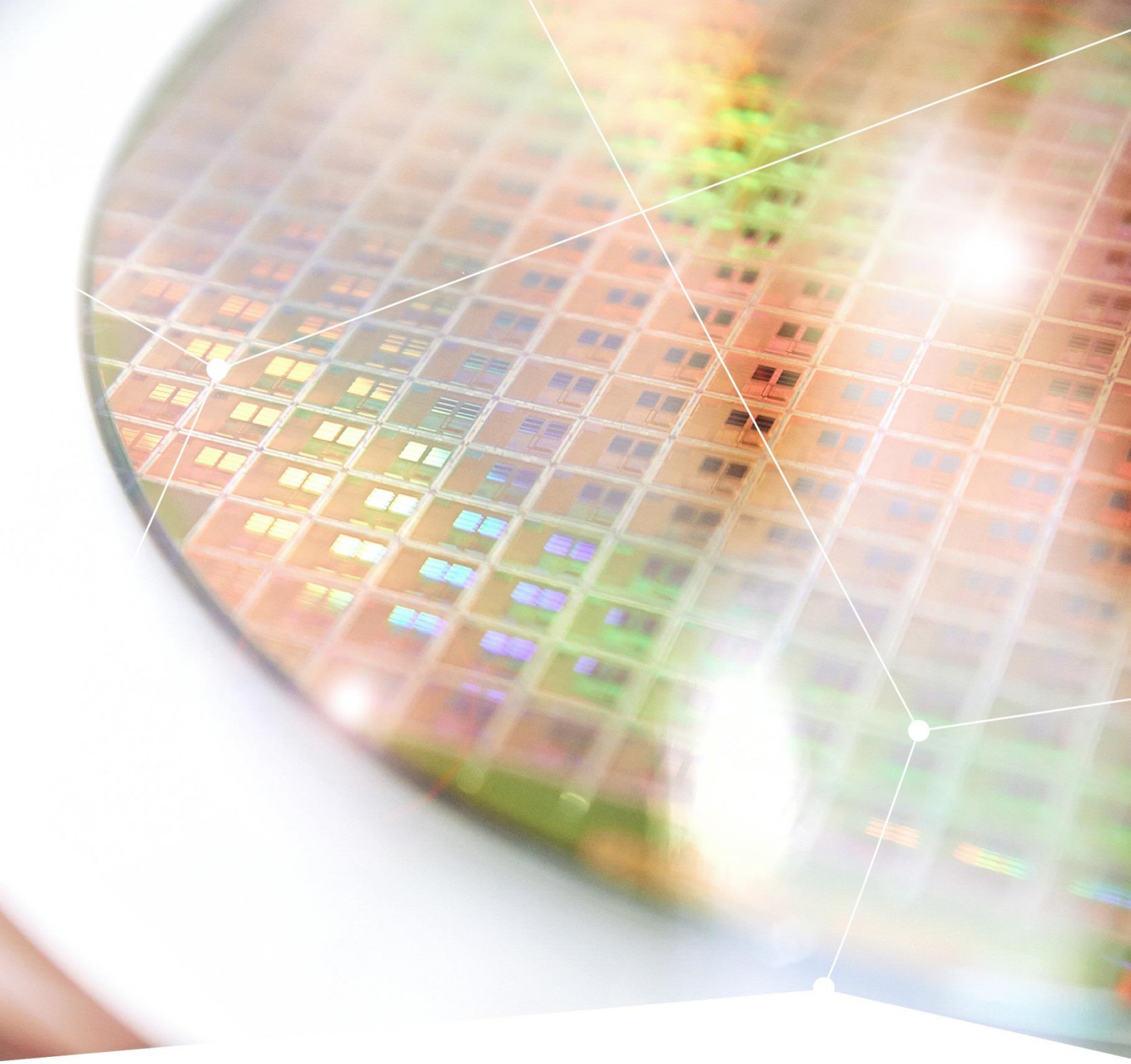

Infineon Technologies
New Products Introduction

September 2016

RUTRONIK
ELECTRONICS WORLDWIDE

Infineon

Content

800 V CoolMOS™ P7 series
A new benchmark in efficiency and thermal performance

OptiMOS™ 5 150 V
A breakthrough reduction in $R_{DS(on)}$ and reverse recovery charge (Q_{rr})

Low-Side Switch Shield with BTF3050TE for Arduino
This Shield adds powerful low-side switches to Arduino projects

1200 V RC-E Reverse Conducting IGBT
Economical and efficient IGBT for induction cooking appliances

New 62mm IGBT Modules
FF400R17KE4 - FF400R17KE4_E

AURIX™ Motor Control Extension Board

800 V CoolMOS™ P7 series

A new benchmark in efficiency and thermal performance

The latest 800 V CoolMOS™ P7 series sets a new benchmark in 800 V superjunction technologies and combines best-in-class performance with state-of-the-art ease-of-use, resulting from Infineon's more than 18 years pioneering superjunction technology innovation.

Features

- Best-in-class FOM $R_{DS(on)}$ * E_{oss}; reduced Q_g, C_{iss}, and C_{oss}
- Better DPAK $R_{DS(on)}$ of 280 mΩ, 360 mΩ, and 450 mΩ with 280 mΩ as best-in-class
- Best-in-class $V_{(GS)th}$ of 3.0 V and smallest $V_{(GS)th}$ variation of ±0.5 V
- Integrated Zener Diode ESD protection up to Class 2 (HBM)
- Best-in-class quality and reliability
- Fully optimized portfolio

Benefits

- 0.1% to 0.6% efficiency gain and 2°C to 8°C lower MOSFET temperature as compared to market offers
- Enabling higher power density designs, BOM savings and lower assembly cost
- Easy to drive and to design-in
- Better production yield by reducing ESD related failures
- Less production issues and reduced field returns
- Easy to select right parts for fine tuning of designs

Target applications

- Adapter
- LED lighting
- Audio power
- Industrial SMPS
- AUX power

Support/Tools/Software

- Simulation software, application note, 45 W IFX adapter demo board

Product collaterals / online support

- Product landing page

Link to videos

- 800V CoolMOS™ P7 – Video

Block diagram

Dual stage flyback P7

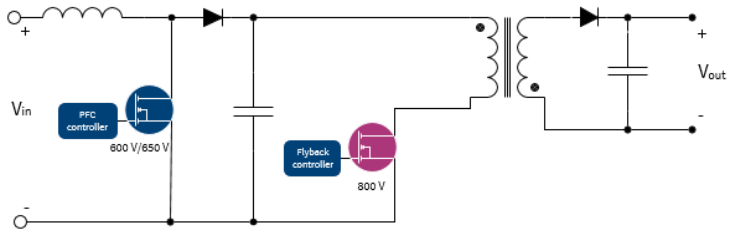

Single stage flyback P7

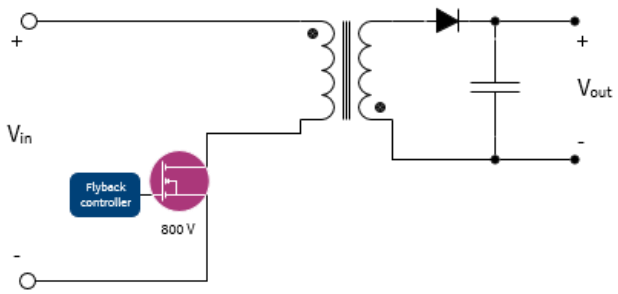

Product data sheets

- IPD80R280P7 page, IPD80R450P7 page, IPD80R1K4P7 page, IPD80R4K5P7 page, IPU80R1K4P7 page, IPU80R4K5P7 page, IPS80R1K4P7 page, IPP80R280P7 page, IPP80R450P7 page, IPP80R1K4P7 page, IPA80R280P7 page, IPA80R450P7 page, IPA80R1K4P7 page, IPW80R280P7 page

OptiMOS™ 5 150 V

A breakthrough reduction in $R_{DS(on)}$ and reverse recovery charge (Q_{rr})

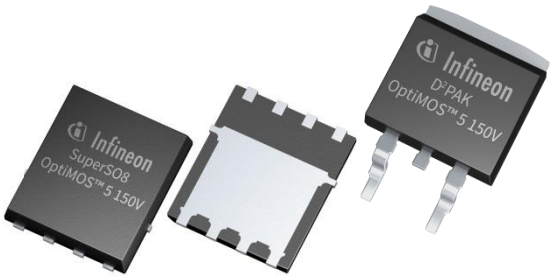

With a low reverse recovery charge and reduced $R_{DS(on)}$, OptiMOS™ 5 150 V offers increased commutation ruggedness for applications such as low voltage drives, telecom and solar. Available in six different packages, the new technology enables smaller best-in-class SuperSO8 (PQFN 5x6) package devices to replace TO-220 alternatives.

Features

- Lower $R_{DS(on)}$ without compromising FOM_{gd} and FOM_{OSS}
- Lower output charge
- Low reverse recovery charge
- Increased commutation ruggedness
- Higher switching frequency possible

Benefits

- Reduced paralleling
- Size reduction enabled with SuperSO8 best-in-class
- Higher power density design
- More rugged products
- System cost reduction
- Improved EMI behavior

Product collaterals / online support

- Product landing page *link is live from 11th October 2016
-

Target applications

- Low voltage drives
- Telecom
- Solar

Link to videos

- Next Generation OptiMOS™ 5 150 V Power MOSFETs – Video *link is live from 11th October 2016

Product data sheets

- IPB048N15N5 page, IPB073N15N5 page, IPB044N15N5 page, IPI076N15N5 page, IPP076N15N5 page, BSC093N15NS5 page, BSC110N15NS5 page, BSC160N15NS5 page

Block diagram

Solar microinventer and power optimizer

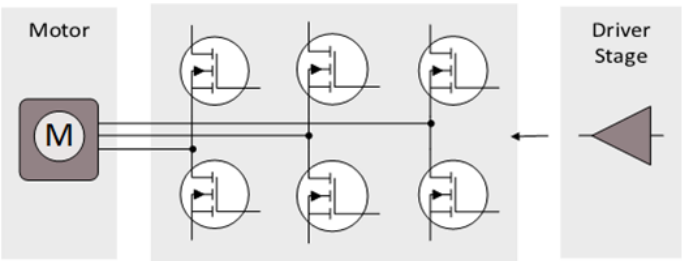

Telecom synchronousrectification

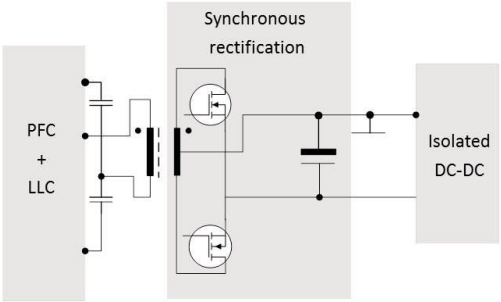

Low voltage drives Forklift and LEV

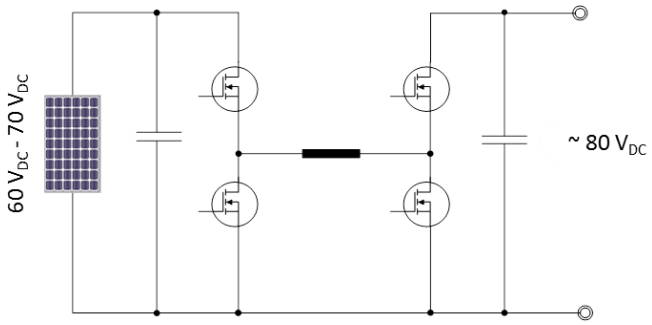

Telecom isolated DCDC brick converter

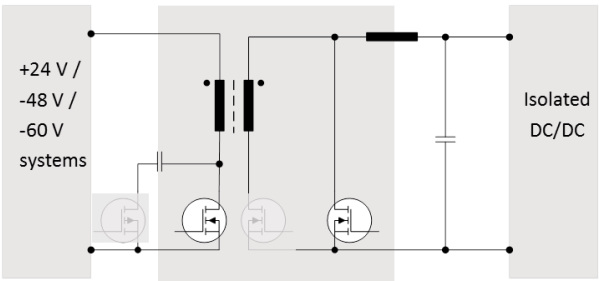

Low-Side Switch Shield with BTF3050TE for Arduino

This shield adds powerful low-side switches to Arduino projects

It consists out of three HITFET™+ BTF3050TE low-side switches providing three independent power channels that can be controlled via the input pins. The shield is compatible with microcontroller boards using the Arduino form factor for example the corresponding ARM® powered XMC™ microcontroller kits from Infineon.

The BTF3050TE low-side switch is automotive qualified and able to drive resistive, inductive and capacitive loads with a nominal load current of 3 A. Furthermore the smart low-side switch provides diagnosis and protection features (e.g. overtemperature, overcurrent).

Features

- Compatible with microcontroller boards using the Arduino form factor, e.g. the corresponding Infineon XMC™ kits
- PWM up to 14kHz (10% duty cycle)
- Driver circuit with logic level inputs
- Fault feedback
- Protection e.g. against overtemperature and overcurrent

Benefits

- Fast and inexpensive prototyping of a wide range of applications
- Easy testing of low side switch configuration
- Latched and stable fault signal independent of the input pin
- Overtemperature shut down with autorestart behavior
- Double current limitation for inrush current
- Easy control of the PWM's duty cycle

Application examples

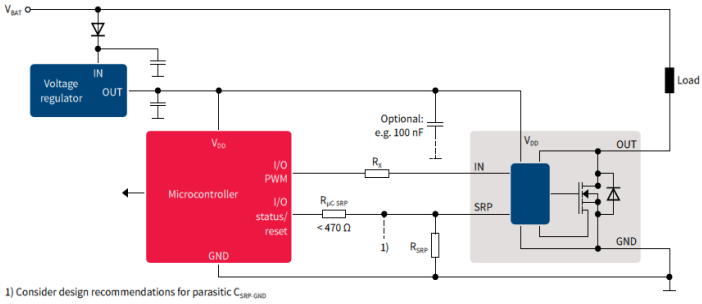

Block diagram

Block diagram HITFET™+ BTF3050TE

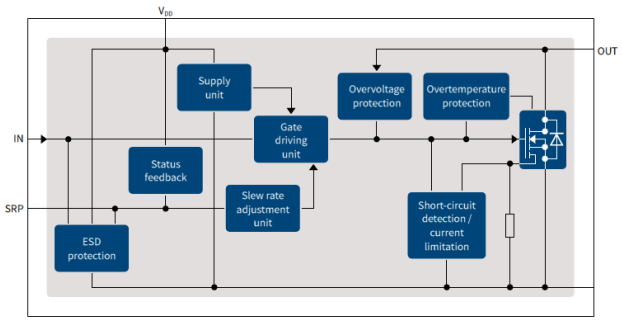

Product collaterals / online support

- Product landing page
- Shields for Arduino
- Automotive Smart Low-Side Switch | HITFET™

Support/Tools/Software

- Quick Start Guide
- User Manual
- Application Note BTF3050TE

1200 V RC-E Reverse Conducting IGBT

Economical and efficient IGBT for induction cooking appliances

The new RC-E series IGBTs build on a long tradition of application specific technologies. They are cost- and feature-optimized specifically for low- to mid-range induction cookers and other resonant applications. The RC-E technology uses an IGBT with monolithically integrated reverse conduction diode to set the new benchmark for price/performance and ease-of-use in the industry. This new family offers Infineon's proven quality in RC IGBTs and meets all the needs of soft switching applications, including attractive pricing compared to other general purpose IGBTs.

Features

- Low Eoff and Vce(sat)
- Designed for soft switching applications
- Optimized for performance with switching frequencies from 18 kHz–40 kHz
- Most commonly used blocking voltage,1200 V

Benefits

- Price versus performance leader for cost-effective designs
- Low losses help designs meet energy efficiency standards
- Drop-in replacement for existing designs
- Soft switching for good EMI behavior

Target applications

- Induction cooking
- Application examples:
  - Table top induction cookers
  - Multi-hob induction stoves

Support/Tools/Software

- PSPICE simulation model

Product collaterals / online support

- Product landing page
- **IHW25N120E1**
  - Product page
  - Product data sheet page
- **IHW15N120E1**
  - Product page
  - Product data sheet page

Block diagram

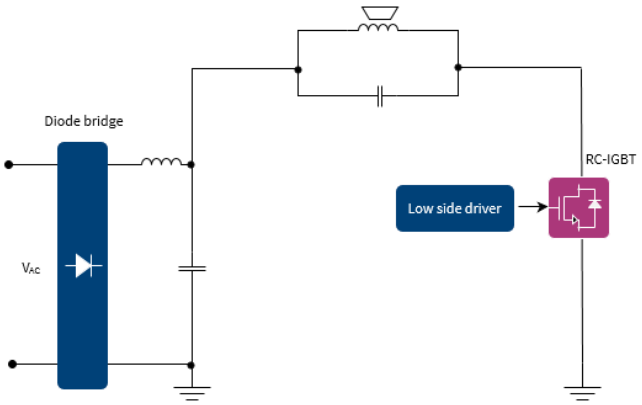

New 62mm IGBT Modules

FF400R17KE4 - FF400R17KE4_E

62mm Half-Bridge-Modules with 400A / 1700V offer highest power density and increased inverter output power with same frame size. These new 62mm IGBT modules with trench/fieldstop IGBT4 and 'Emitter Controlled' diode is also available with Thermal Interface Material.

Features

- **400A / 1700V**
- Increased DC link Voltage
- $T_{vj\,op}$ = 150°C
- RoHS compliant
- 4 kV AC 1 min Insulation
- Package with CTI > 400
- High Creepage and Clearance Distances
- UL/CSA Certification with UL1557 E83336

Benefits

- Existing packages with higher current capability, allows to increase inverter output power with same frame size
- Highest power density
- Flexibility (Check)
- Optimal electrical performance
- Highest reliability

Target applications

- Drives, Solar, UPS, Wind

Product Data Sheet Page

- FF400R17KE4
- FF400R17KE4 data sheet page
- FF400R17KE4_E
- FF400R17KE4_E data sheet page

Product collaterals / online support

- Product landing page

Block diagram

Halfbridge:

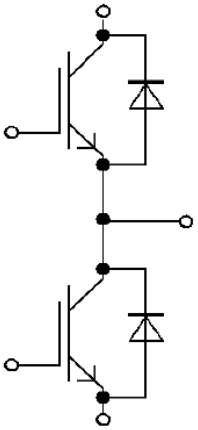

Common Emitter:

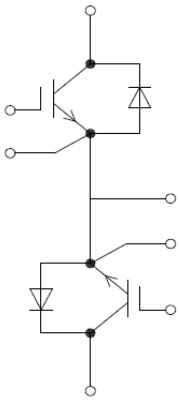

Completing products (P2S)

- This 1700V module can be combined with the dedicated Evaluation Board MA070E17
- 3-level phase leg configurations are possible in combination with our high efficient 1700V 62 mm dual modules. We recommend to use the fast switching FF400R17KE4 with trench/fieldstop IGBT4 included.
- Please find the appropriate Gate Driver Boards (EiceDRIVER™Safe): 2ED300C17-S / 2ED300C17-ST
- Add value with the NEW 34 mm and 50 mm bipolar modules in solder bond technology

AURIX™ Motor Control Extension Board

Easy start of development for your motor control application

An extension board to the AURIX™ TFT application kit is allowing to control up to 4 uni and bi-directional Brushed DC Motors together with the high current half bridge BTN8982 NovalithIC™.

Features

> DC motor PowerBoard
- 12 V / 10 A
- Up to four brushed DC motor can be controlled
- BTN8982 NovalithIC™ high current PN half bridge
- Current measurement
- Combinable with all application kits
- Myinfineon.com : download AppNote AP32333
- DC motor
- Uni-directional
- Bi-directional

Evaluation boards

> KIT_AURIX_TC224_TFT page
> KIT_AURIX_TC234_TFT page
> KIT_AURIX_TC237_TFT page
> KIT_AURIX_TC265_TFT page
> KIT_AURIX_TC267_TFT page
> KIT_AURIX_TC277_TFT page
> KIT_AURIX_TC297_TFT page

Target application

> Motor Control & Drive applications

Product collaterals / online support

> Product landing page