RUTRONIK POWER

RUTRONIK ELECTRONICS WORLDWIDE

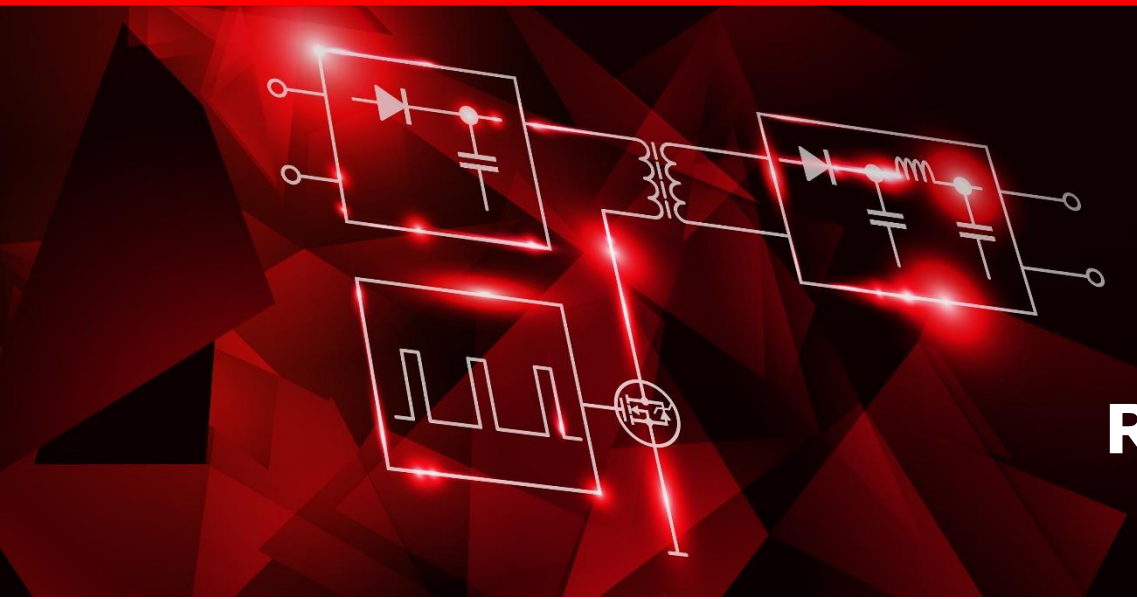

RUTRONIK TechTalk meets Gate Driver

One-stop-shop: Infineon the universal gate driver supplier

Davide Giacomini | Director Product Marketing

Infineon Technologies AG

Agenda

1 Infineon Gate Drivers

Why Infineon Gate Drivers

Available technologies and their application fit

2 Infineon Silicon-On-Insulator (SOI) technology

Advantages

Performances

SOI Products Highlight

3 Infineon Galvanically Isolated Technology

Copyright © Infineon Technologies AG 2021. All rights reserved.

Agenda

Why do we need Galvanic Isolation

Coreless Transformer Technology

Isolated Gate Drivers Highlight

4 Infineon Gate Drivers at a glance

5 Training and support material available

Copyright © Infineon Technologies AG 2021. All rights reserved.

Agenda

1 Infineon Gate Drivers

Why Infineon Gate Drivers

Available technologies and their application fit

2 Infineon Silicon-On-Insulator (SOI) technology

Advantages

Performances

SOI Products Highlight

3 Infineon Galvanically Isolated Technology

Copyright © Infineon Technologies AG 2021. All rights reserved.

Why Infineon gate drivers?

EiceDRIVER™ gate drivers

- **No. 1 supplier of gate driver ICs***
- **Largest product portfolio coverage from 20 V to 1200 V**
- **World-class production, quality, and business continuity support**
- **Experienced, best in class application engineers, and excellent support**

www.infineon.com/gatedriver

*IHS market report 2019

Copyright © Infineon Technologies AG 2021. All rights reserved.

Gate Driver IC Technology Overview
Wide portfolio to best fit with application requirements

Non-Isolated GD

Low-side

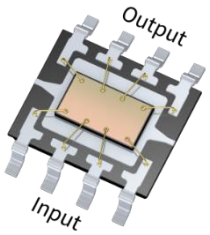

- **Comprehensive Families** of single- and dual-low-side drivers with flexible options for output current, logic configurations and UVLOs (plus non-isolated TDI)
- **Rugged technology** of the high-voltage gate drivers, and on the latest state-of-the-art 130-nm process
- **Industry-standard** DSO-8 and small form-factor SOT23, WSON and TSNP packages

Level-Shift GD

Junction Isolation (JI)

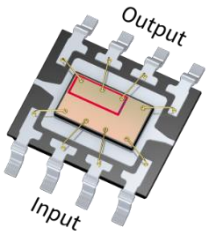

- **Proven technology** trustfully used in all high-voltage gate drive applications for over 20 years
- **Largest portfolio** of 120V, 200 V, 600 V, and 1200 V industry standard gate drivers using rugged proprietary HVIC process
- **Solution-specific** motor-control and switch-mode power applications

Silicon on Insulator (SOI)

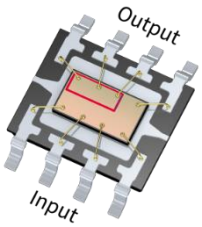

- **Infineon SOI technology** for high-voltage applications with **inherent integrated boot-strap diode** capability and lower level-shift losses
- Industry **best-in-class robustness against negative VS transient spikes**
- Higher level of integration reduces BOM and total system cost

Isolated GD

Coreless Transformer

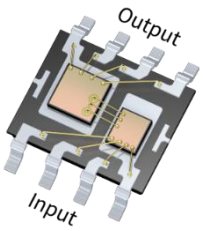

- **Magnetically-coupled isolation technology** provides galvanic isolation for industrial applications
- **Strongest gate-drive output currents** (up to 14 A) reducing need for external booster circuits
- **Reliable and accurate protection** precise & fast on-/off-switching, desat protection, active Miller clamp, isolation rating in different packages, VDE 0884-11 certification

Copyright © Infineon Technologies AG 2021. All rights reserved.

General Application and Product Overview

Key applications and product families

Non-Isolated

Low Voltage Gate Driver

Multiple Markets

Low-side Families:

Single Channel:
1ED44176/175/173,
IRS44273, 1EDN

Dual Channel: IRS4427,
2EDN, 2ED24427

Level-Shift

Junction Isolation | Silicon On Insulator

Markets up to 10kW

JI Product Families:

Gen1/2: IR2214, IR2110/13, IR2010/2011, IR2136

Gen5: IRS2005/7/8, IRS2011, IRS2308, IRS2106

SOI Product Families:

2ED2101/3/4, 2ED2110
2ED2106/8/9/91, 2ED218x
6ED2230, 6EDL04, 6ED003L
2ED2304, 2EDL05, 2EDL23

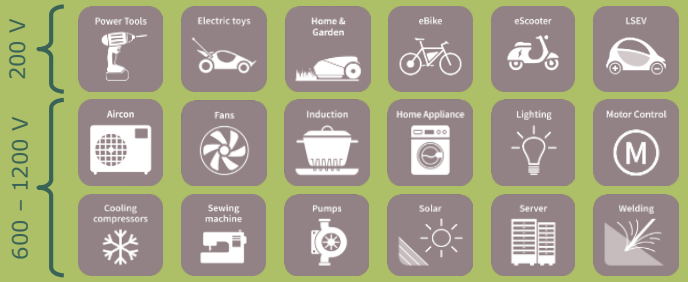

Galvanic Isolation

Coreless Transformer

Markets > 5-100kW

Product Families:

Compact, Enhanced, X3
e.g. 1EDxx, 2EDxx

Copyright © Infineon Technologies AG 2021. All rights reserved.

Technologies for High voltage applications

Level-Shift

Junction Isolation (JI) an SOI

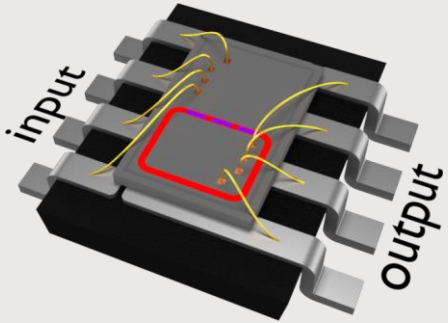

- Monolithic solution with guard ring (red) to separate input side from output side and to allow high voltage swings (600 V/ 1200 V) at output chip.
- Level-shifting circuitry (purple) inside guard ring to transmit switching information between input and output and diagnostics in the opposite direction.

Galvanic Isolation

Coreless Transformer (CT)

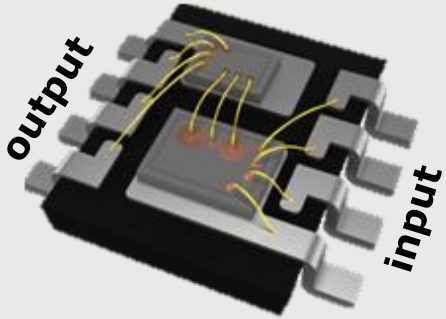

- Two isolated chip ensures galvanic isolation.
- Isolation allows very large voltage swings (±1200 V).
- Coreless transformers are used for transmitting switching information between input chip and output chip.

Copyright © Infineon Technologies AG 2021. All rights reserved.

Gate-Driver IC Isolation Technology Overview
Choices for best application fit

Level-Shift

Junction Isolation (JI)

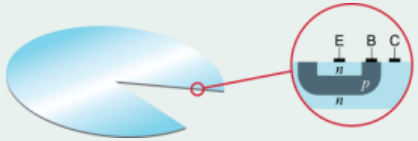

Industry-standard High-voltage JI

- **Monolithic construction** of multiple gate drive channels up to 1200 V
- Optional Integrated bootstrap - FET circuit (200 Ω typ.)
- Negative transient immunity to prevent latch-up: -40 V for 100 ns, typ.
- Common mode transient immunity (CMTI): 50 V/ns, typ.

Silicon On Insulator (SOI)

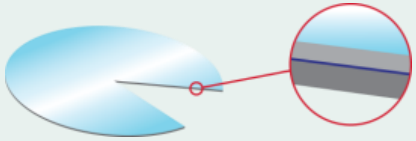

Infineon SOI HV technology

- **Monolithic construction** of multiple gate drive channels up to 1200 V with **low level-shift losses**
- Inherent **integrated PN-based bootstrap diode** (40 Ω typ.)
- **Negative** transient immunity to prevent latch-up: **-100 V for 300 ns**, typ. and **-100 V for 700ns** (1200 V)
- Common mode transient immunity (CMTI): 50 V/ns, typ.

Galvanic Isolation

Coreless Transformer (CT)

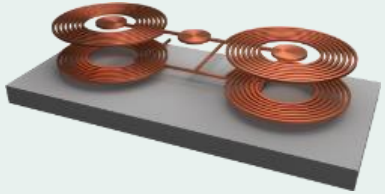

Magnetically-coupled isolation

- Two separate chips solution providing galvanically isolated single- and dual channel gate drivers
- Provides **isolation up to 8 kV$_{pk}$ V$_{IOTM}$**
- **Continuous immunity** against **negative & positive** transients due to floating output dice, **up to ±1700 V**
- Common-mode transient immunity (**CMTI**) of **more than 300 V/ns**

Copyright © Infineon Technologies AG 2021. All rights reserved.

Agenda

1 Infineon Gate Drivers

Why Infineon Gate Drivers

Available technologies and their application fit

2 Infineon Silicon-On-Insulator (SOI) technology

Advantages

Performances

SOI Products Highlight

3 Infineon Galvanically Isolated Technology

Copyright © Infineon Technologies AG 2021. All rights reserved.

Infineon Silicon-On-Insulator (SOI) technology

Best in Class solution advantages

Low level-shift loss in high frequency application

- Lowest power loss
- Higher frequency operation: > 100 kHz
  - ~10% lower temperature - smaller heat sink
  - New applications in SMPS, UPS, LED

Low level-shift loss in high frequency application

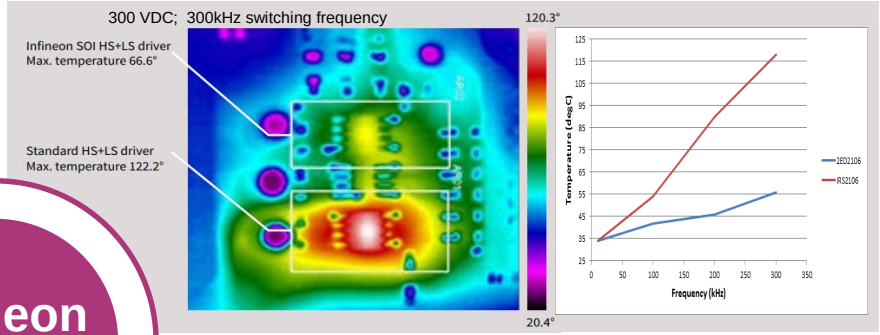

Infineon SOI

Leading negative VS transient immunity

- Improved and leading robustness (-100 V)
  - With repeating 300 ns pulse widths
- Negative VS transient SOA curves in DS
- High reliability - lowest failures
  - Customer example (6EDL04):
    - **1M inverters built with zero failures (0 ppm gate driver failure rate)**

Operation robustness of negative VS

- T

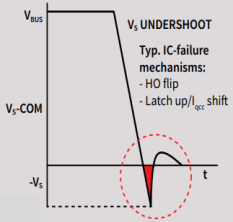

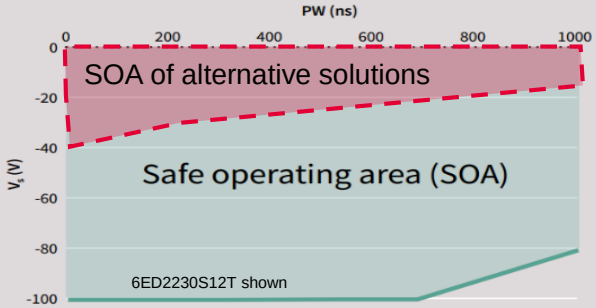

Copyright © Infineon Technologies AG 2021. All rights reserved.

Infineon Silicon-On-Insulator (SOI) technology
Best in Class solution advantages

Integrated bootstrap diode (BSD)

- True diode with ultra-fast reverse recovery, low ON resistance
- Useable internal bootstrap diodes (eg. 36 Ω) vs. BootFETs of > 125 – 200 Ω, or none
- Reduced PCB and internal logic complexity
- Full motor control algorithm support
- Faster bootstrap capacitor charging and wider range of PWM duty-cycle supported
- **Space/cost saving ($0.06 - $0.09) per inverter**

Integrated bootstrap diode (BSD)

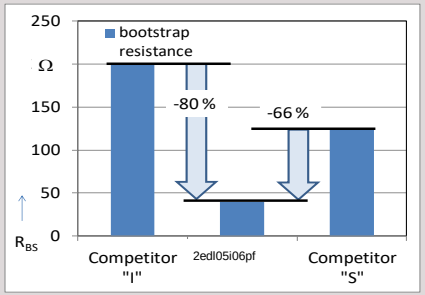

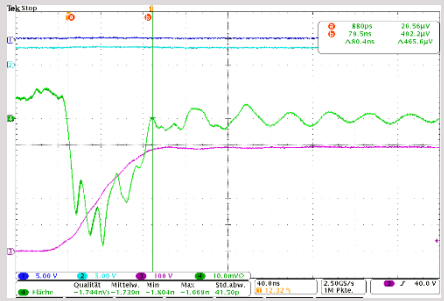

Reverse recovery behavior
Io = 7.8 mA VBUS = 400 V,
Ch1 = HIN1 Ch2 = LIN1,
Ch3 = VS2 Ch4 = 10 mA/div

Infineon SOI

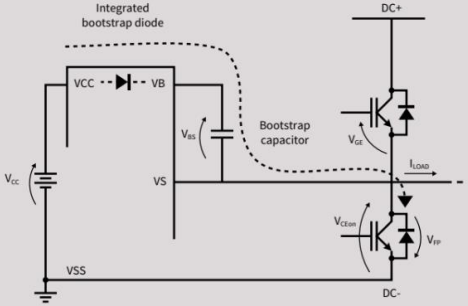

Copyright © Infineon Technologies AG 2021. All rights reserved.

Level shift switching losses - 2ED2304S06F

QLS data from (room temp): 5 samples for each parts

Part No.	QLS (nC)	ILK(uA)@VB=600V
Gen 2/5	5.20	50
Supplier F	5.81	50
2ED2304S06F	0.65	12.5

Level shift switching loss: ≈13%
Leakage loss: ≈25%

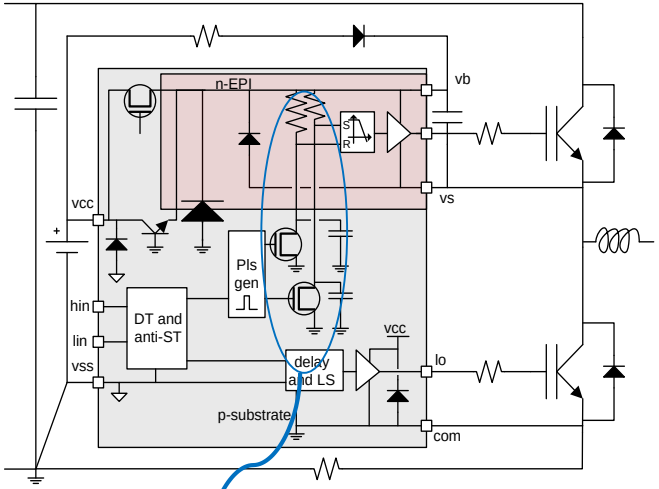

- Level shift switching loss
- High voltage Offset leakage loss

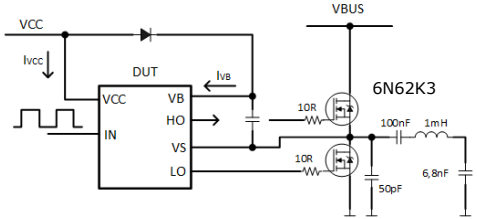

- Operating frequency = 100kHz / 200kHz
- For 100kHz → 1mH, 200kHz → 500µH
- V_{BUS}=400V,VCC=15V, 50%duty
- Temp measurement pcb open on the bench

Copyright © Infineon Technologies AG 2021. All rights reserved.

Infineon SOI superior high frequency operation

Temperature vs. Frequency comparison

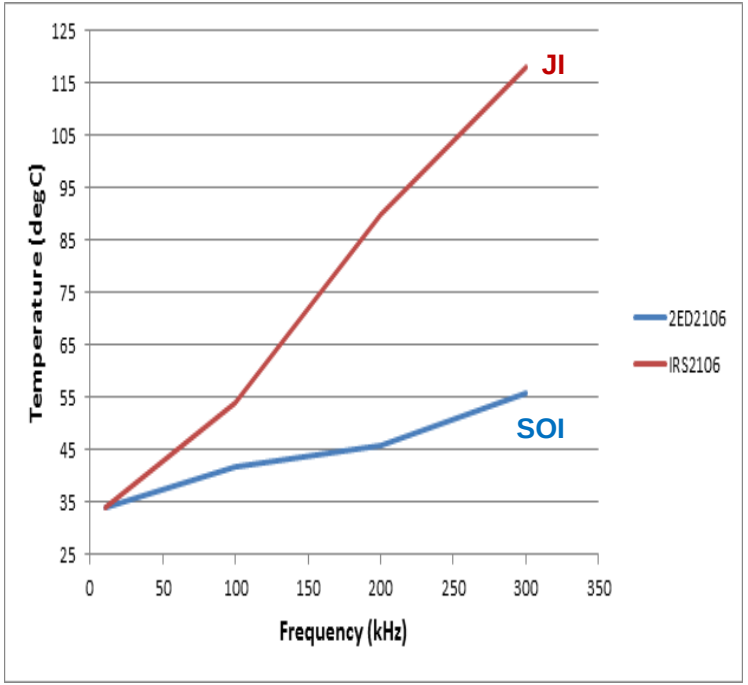

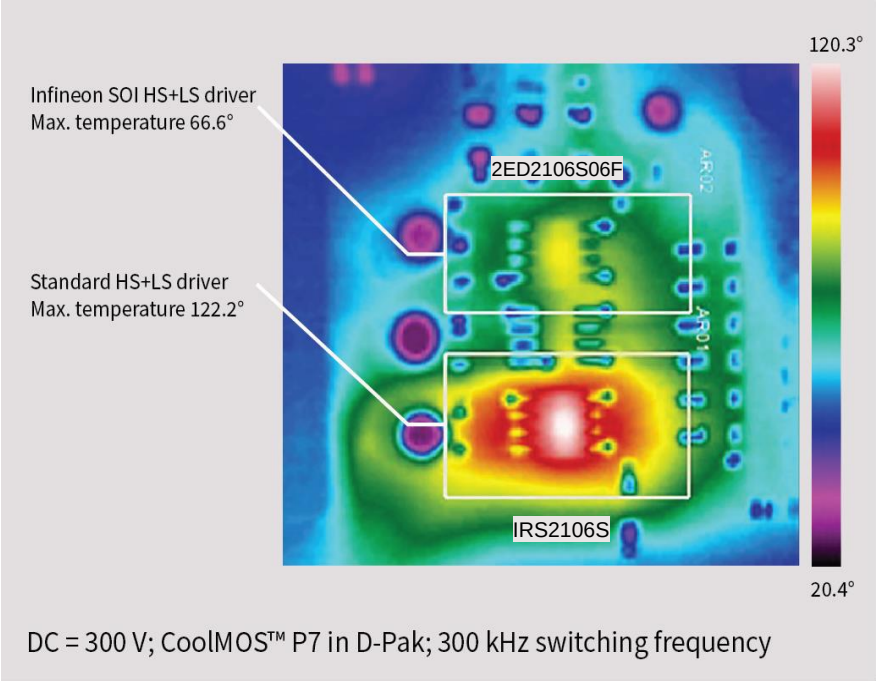

DC = 300 V; CoolMOS™ P7 in D-Pak; 300 kHz switching frequency

Copyright © Infineon Technologies AG 2021. All rights reserved.

Temperature measurement comparisons
with thermal camera summary (Ta=25°C)

	Temp(°C)				
fsw(kHz)	2ED2106	2ED2101	Ref. device 3	Ref. device 2	Ref. device 1
100	40.3	39.3	58	44.5	71.8
200	47.9	43.4	71.1	52.1	113.6
300	55.4	47.2	91.2	65.1	165.3
400	63	52.3	116.7	81	
450	65.4	55.2	126.5	87.5	
500	67.5	57.1	134.6	94.1	

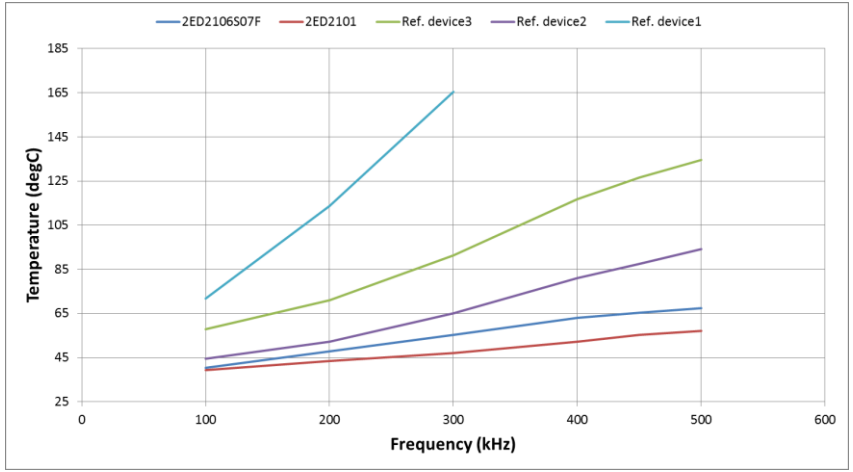

- ✓ For SOI based 2ED2106 and 2ED2101, the power dissipation of bootstrap diode is included here since it is monolithically integrated.
- ✓ For all other parts, they have to use external bootstrap diode, so the power dissipation from bootstrap is not shown in this measurement result

Copyright © Infineon Technologies AG 2021. All rights reserved.

Negative VS test board schematics

- **Test Condition**
  - A minus Vs test board was designed to find failure modes of the C5SOI actual ICs
  - This tester is extending the square pulse generated to -200V and pulse widths 100ns - 1000ns
  - 2 failure modes identified: HO flip and Iqcc leakage shift (destructive failure)
  - Test set up is monitoring: Iqcc leakage and HO status before and after minus Vs pulse

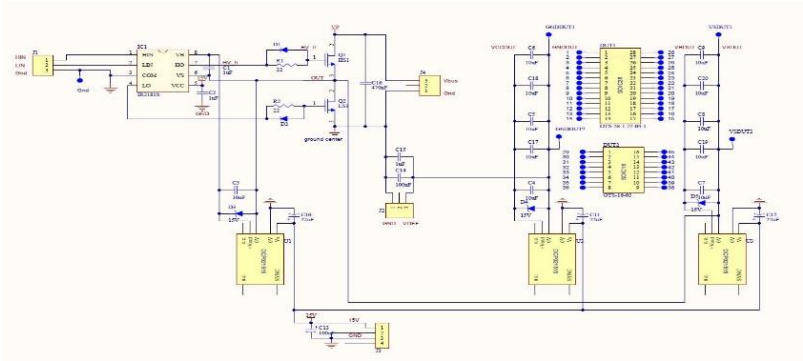

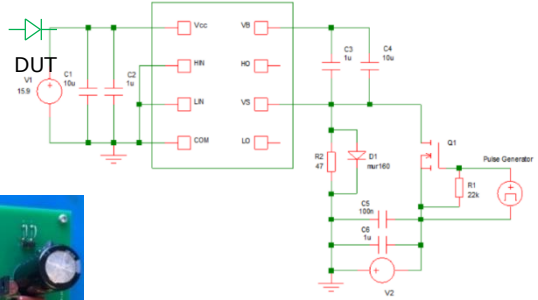

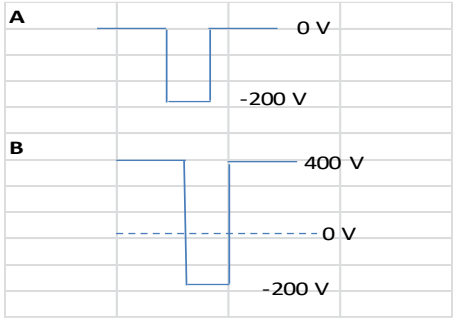

Copyright © Infineon Technologies AG 2021. All rights reserved.

2EDL05N06 – Test results

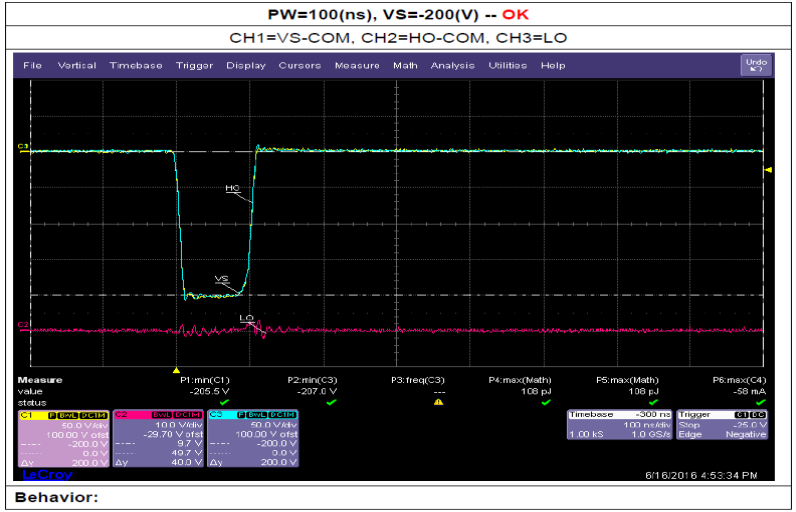

CH1 yellow Vs-COM
CH2 blue HO-Vs
Ch3 red LO-COM

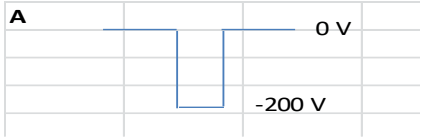

2EDL05: No failures at -200 V / 100ns

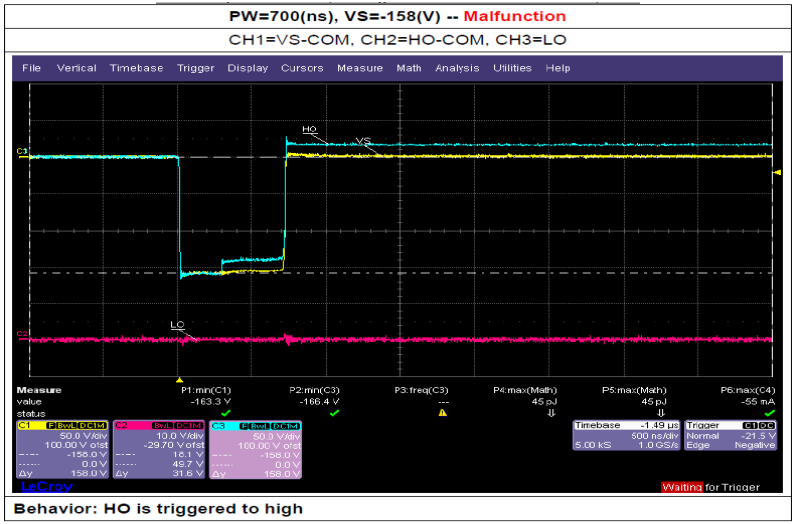

CH1 yellow Vs-COM
CH2 blue HO-Vs
Ch3 red LO-COM

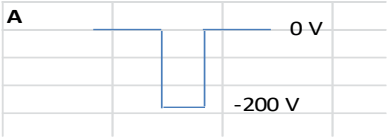

2EDL05: HO state change at -158V / 700ns

Copyright © Infineon Technologies AG 2021. All rights reserved.

Infineon SOI's superior - VS transient immunity
provides increased robustness and reliability

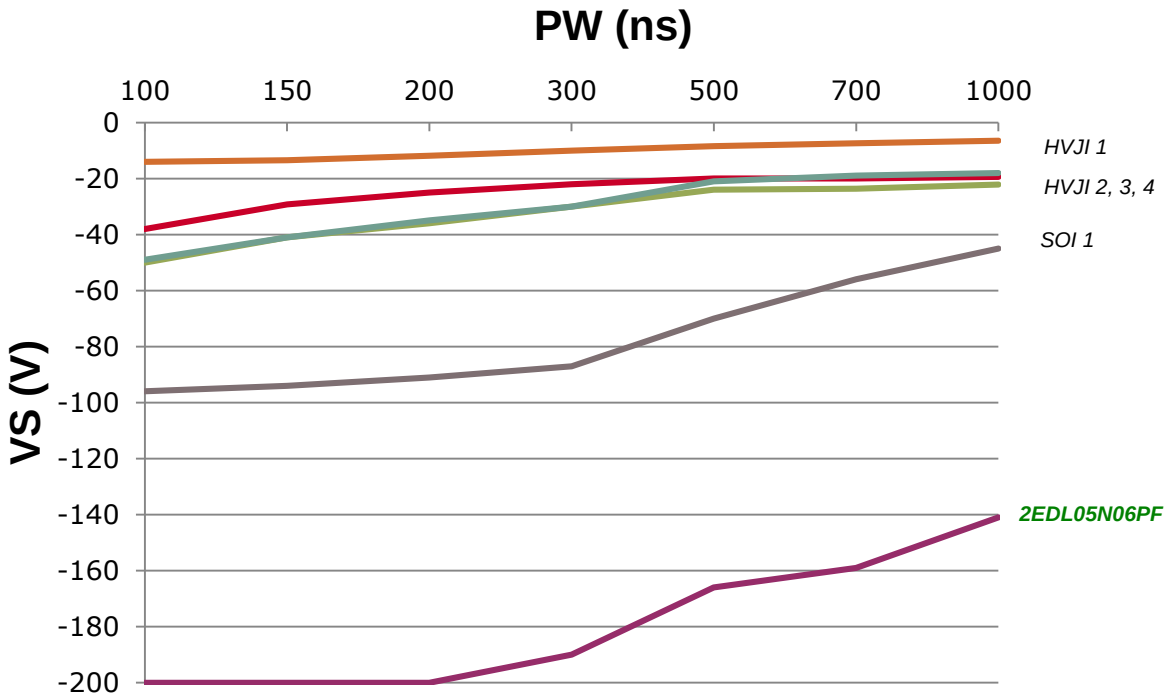

The negative VS spike problem increases dramatically with faster switching and larger parasitic PCB inductances

Copyright © Infineon Technologies AG 2021. All rights reserved.

Infineon High-voltage Silicon on Insulator Technology
Best-in-class ultra-fast **integrated** bootstrap diodes

- The bootstrap structure supplies the floating high side sections
- BS structures usually have high drift zone resistances R_{BS}, which make the supply difficult
- 2ED2304S06 - offers typically 36Ω

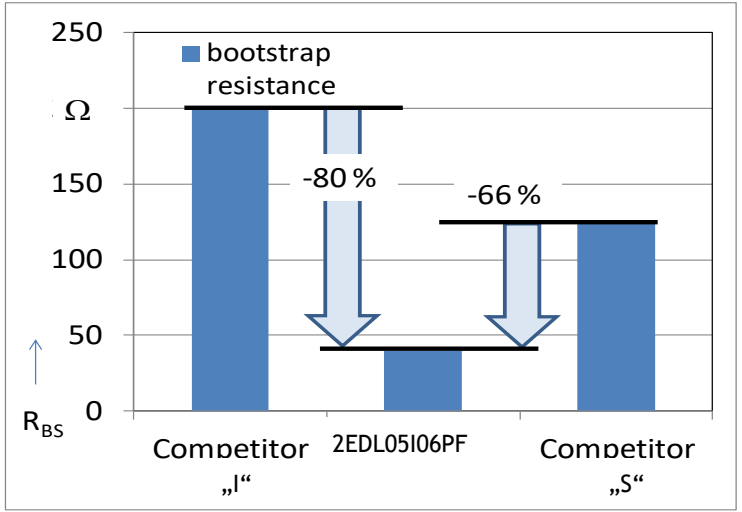

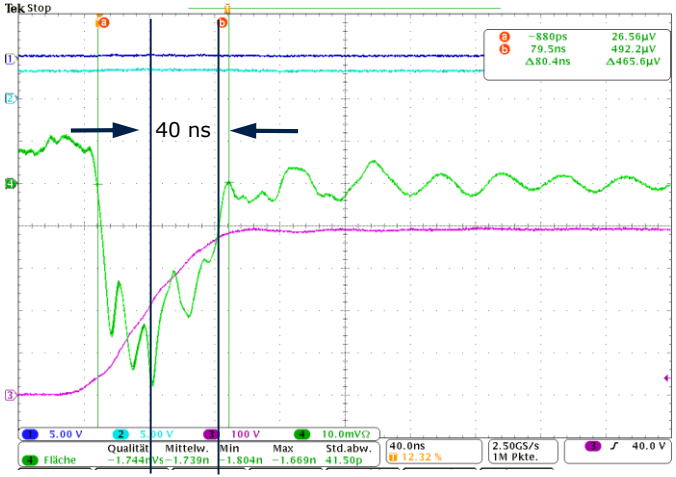

Reverse recovery behaviour
Io=7.8mA VBUS=400V,
Ch1=HIN1 Ch2=LIN1,
Ch3=VS2 Ch4=10mA/div

Copyright © Infineon Technologies AG 2021. All rights reserved.

Agenda

1 Infineon Gate Drivers

Why Infineon Gate Drivers

Available technologies and their application fit

2 Infineon Silicon-On-Insulator (SOI) technology

Advantages

Performances

SOI Products Highlight

3 Infineon Galvanically Isolated Technology

Copyright © Infineon Technologies AG 2021. All rights reserved.

6ED2230S12T at-a-glance
1200 V, SOI, 3-phase gate driver

Key Features

- **1200 V Infineon SOI Technology**
- **Integrated, Ultra fast, low R_{DSON} bootstrap diode**
- Integrated 360 ns dead-time
- Output current: I_{O+} 350 mA, I_{O-} 650 mA
- Independent Under-voltage lockout for V_{CC} and V_{BS}
- **25 V V_{CC}** maximum voltage supply
- 3.3 V, 5 V, 15 V input logic compatible
- Best in class minus VS performance
  - **-100 V with repetitive 700 ns pulses**
- SOIC-28 package (with 4 pins removed for high clearance)
- Over current protection **(ITRIP +/-5% reference)**
- **Less than 1 us output shutdown for OCP events**
- Fault reporting, automatic Fault clear and Enable function on the same pin **(RFE)**
- 2 kV HBM ESD

DSO-24

Value Proposition

- Integrated, fast, and low R_{DSON} bootstrap diode
  - Simplified lower-cost driver for 1200 V IGBTs
- Industry leading minus VS robustness
  - Increased reliability and noise immunity
- Easy to use for fast time to market

Sample Schematic

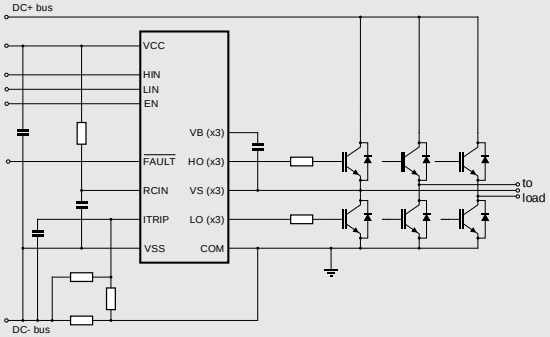

Typ. App.

$I_{O+/-}$ (typ) [mA]	Ton/off (typ) [ns]	DT (typ) [ns]	Tr/f (typ) [ns]	Input Filter (Typ) (ns)	Vcc/Vbs UVLO typ.
350/650	600	460	40	300	10.4-11.4 / 9.4-10.4

Available Resources

Datasheet
Tools: SOI GD Power Dissipation Calculation Tool (Internal)
Training: Sales Webinar (Internal)
Evaluation boards: EVAL-M1-6ED2230-B1

Copyright © Infineon Technologies AG 2021. All rights reserved.

Fast Level Shift Gate Driver Family
2ED2101/03/04S06F – Low Current Output

Key Features

- Infineon SOI technology fully operational to 650 V
- Integrated, Ultra-fast, low $R_{DS(ON)}$ Bootstrap Diode
- $I_{O+/-}$ 0.29 A / 0.6 A drive current (typical)
- Tolerant to negative transient voltage up to -80 V (Pulse width up to 500 ns)
- Logic operational for VS of -11 V
- Logic input withstands swing to -5 V
- Low level shift losses
- HS+LS (2ED2101) or HB (2ED2103/04) options

DSO-8

HS+LS Sample Schematic

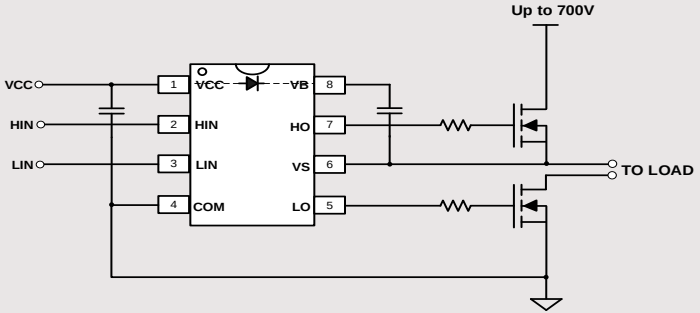

Part Number	$I_{O+/-}$ typ. [mA]	$t_{on/off}$ (typ) [ns]	MT [ns]	$t_{r/f}$ (typ) [ns]	Pin compatible with
2ED2101/03/04S06	290/600	90	10	100/35	IR2101/03/04S
2ED2110S06	2500 / 2500	90	10/20	25/17	IR(S)2110/2113

* The parts without dead time.

Value Proposition

- Simple, low-cost solution to drive MOSFETs or IGBTs up to 650 V
- Shortest prop delay and low level shift loss, Tailored for high frequency applications.
- Robust IC with increased device reliability
- Various industry standard pin-out configurations enables easy, straight forward design for fast time to market
- High frequency operation for HB-LLC and other power supply topologies

Copyright © Infineon Technologies AG 2019. All rights reserved.

Fast Level Shift Gate Driver Family
2ED2110S06 – High Current Output

Key Features

- Infineon SOI technology fully operational to 650 V
- Integrated, Ultra-fast, low $R_{DS(ON)}$ Bootstrap Diode
- $I_{O+/-}$ 2.5 A / 2.5 A drive current (typical)
- Tolerant to negative transient voltage up to -80 V (Pulse width up to 500 ns)
- Logic operational for VS of -11 V
- Logic input withstands swing to -5 V
- Low level shift losses

DSO-16

Sample Schematic

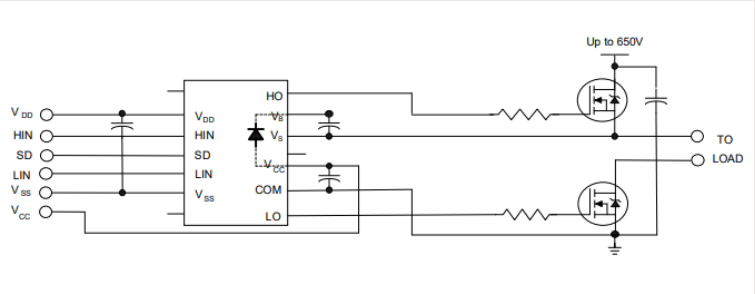

Part Number	$I_{O+/-}$ typ. [mA]	$t_{on/off}$ (typ) [ns]	MT [ns]	$t_{r/f}$ (typ) [ns]	Pin compatible with
2ED2101/03/04S06	290/600	90	10	100/35	IR2101/03/04S
2ED2110S06	2500 / 2500	90	10/20	25/17	IR(S)2110/2113

* The parts without dead time.

Value Proposition

- Simple, low-cost solution to drive MOSFETs or IGBTs up to 650 V
- Shortest prop delay and low level shift loss, Tailored for high frequency applications.
- Robust IC with increased device reliability
- Various industry standard pin-out configurations enables easy, straight forward design for fast time to market
- High frequency HB-LLC and other power supply topologies

Copyright © Infineon Technologies AG 2019. All rights reserved.

Agenda

1 Infineon Gate Drivers

Why Infineon Gate Drivers

Available technologies and their application fit

2 Infineon Silicon-On-Insulator (SOI) technology

Advantages

Performances

SOI Products Highlight

3 Infineon Galvanically Isolated Technology

Copyright © Infineon Technologies AG 2021. All rights reserved.

Why do we need Galvanic Isolation ?

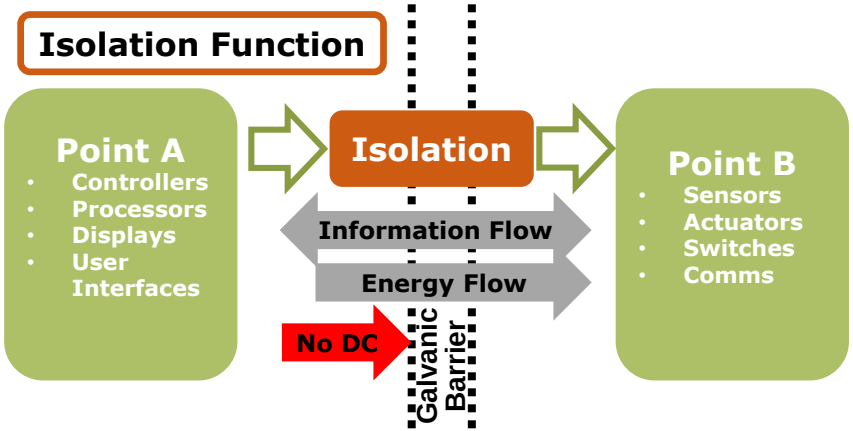

Typical Application Characteristics

- High Voltage
- High Precision
- Long Distance

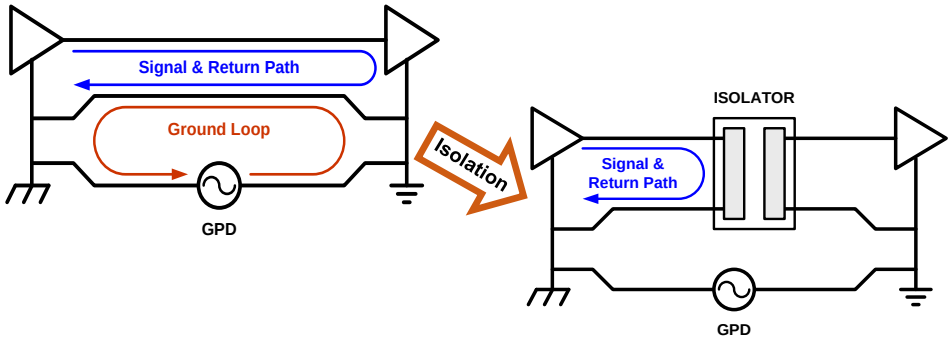

Why Isolate ?

- Safety: People/Equipment
- Comms with unreferenced electronics
- Elimination of ground loop noise
- Fault tolerance
- Confine electrical noise
- Function in presence of ground potential difference.
- Operate in high common mode noise environment

Copyright © Infineon Technologies AG 2021. All rights reserved.

Why galvanically isolated gate drivers? – **Advantages** of **isolated gate drivers**

Independent supplies

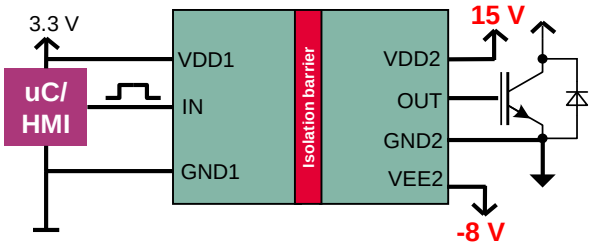

- **Independent input** & **output supply**
- **No limitation** of output voltage in **polarity**
- **Ideal for power modules & SiC MOSFETs**

Safe isolation barrier

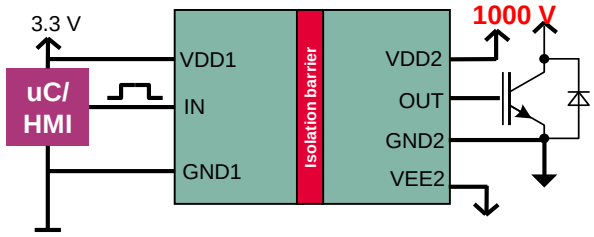

- **Safe input** from **high voltage output**
- **No elect. shock** in case of **high voltage failure**
- **Proven by certification e.g., VDE 0884-11**

Ground shift immunity

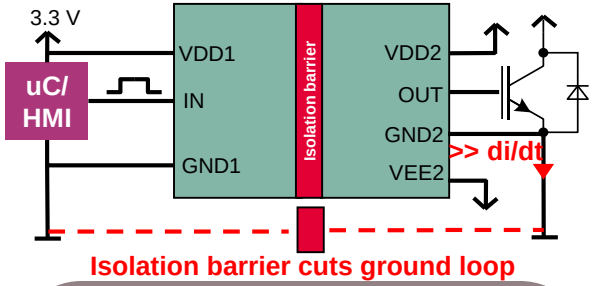

- **High current transients** can cause **ground shift**
- **Ground shift** can cause **input side malfunctions**
- **Isolated GDs cut common ground**

Isolated gate drivers have **zero level-shift losses** → Highly suitable for **higher frequency applications**

Copyright © Infineon Technologies AG 2021. All rights reserved.

Infineon Isolated Products are today based on Coreless Transformer(CT) isolation technology

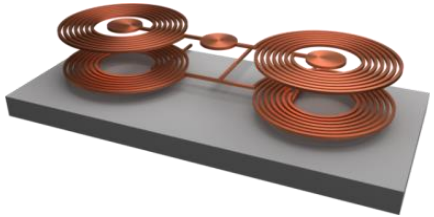

Used e.g. by: **IFX EiceDRIVER™**, ADI, Rohm, ST

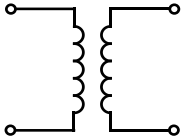

Magnetic Coupling

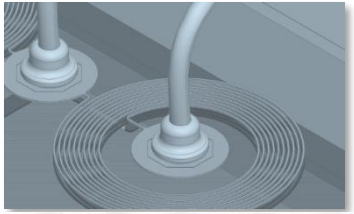

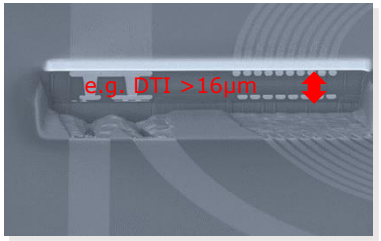

The "SiO2" wafer is the purest anamorph crystalline material in any world wide wafer production today. Without dopping as "P" or "N" it is an insulator with 800 to 1000V/µm withstand capability.

Infineon's CT process technology delivers "Reinforced Fail Safe" with >16µm **DTI D**istance **T**hrough **I**nsulation and patented rounded shape coil structure.

- Reinforced >10kVpk VIOSM * (1,2µs/50µs) Surge Pulse
- V_{IOTM} 6kVpk per VDE0884-10(11)
- V_{ISO} 5.7kVrms per UL1577
- VDE0884-11 (future IEC60747-17) Vpd + TDDB Life test of Insulator for 37,5 year robustness

* VIOSM: Maximum transient Isolation Voltage, defined in IEC60747-5-2 and VDE0884-10

Copyright © Infineon Technologies AG 2021. All rights reserved.

Benefits of Coreless Transformer

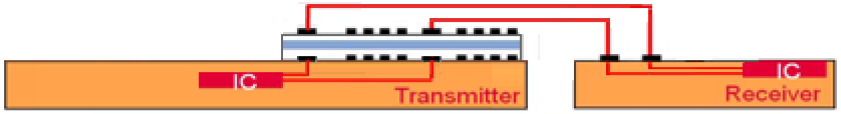

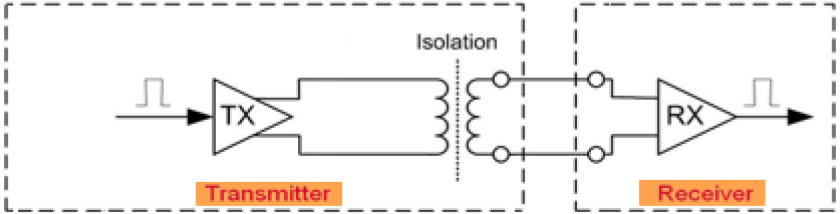

Coil conceptual image

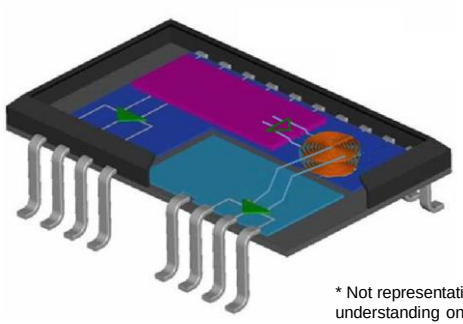

* Not representative of 1ED, for conceptual understanding only

Technology Advantages

- **Simple schematic** (conventional IC technology)
- **No degradation over time** (no aging)
- **Gain reliability** (no parameter drift)
- **Isolation strength** (galvanic isolation)
- **High temperature range** (-40C to +150C)
- **Very fast transmission capability** (60ns typ)
- **Low power consumption** (~1mA)
- **Long Lifetime**

Copyright © Infineon Technologies AG 2021. All rights reserved.

Performance Metrics for Galvanic Isolators :

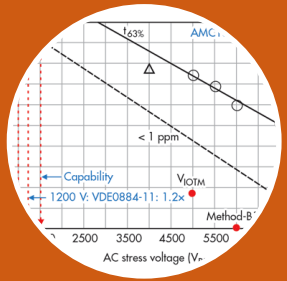

HV Performance

Measure of Insulation Material Dielectric Strength

- Dielectric thickness (**DTI**)
- Surge: basic/reinforced (**V_{IOSM}**)
- Working Voltage: AC/DC (**V_{IOWM}**)
- Time Dependent Dielectric Breakdown (**TDDB**)
- 1-min Voltage Withstand (**V_{ISO}**)
- Conditions: Temp/ humidity/ stress rep-rate

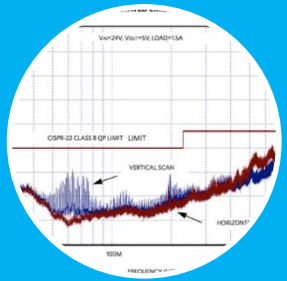

Robustness

Maintain Signal Integrity in Harsh Electrical Environment.

- Common Mode Transient Immunity (**CMTI**)
- Low EMC susceptibility
- Low Radiated Emissions: low CISPR11/32 and FCC (part 15)
- Diff / Single ended architecture
- S-shaped / center tapped Coil

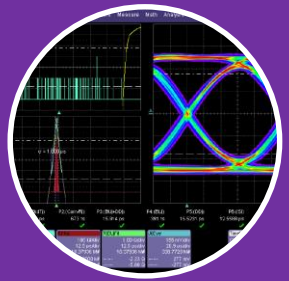

Functional Performance

- **Timing: Data Rate, Propagation Delay (t_p), PWD, Jitter, t_r/t_f, Timing mismatches**
- **Power: Quiescent and Dynamic**
- **Size / Integration**
- **Operating Voltage / Temp**

Copyright © Infineon Technologies AG 2021. All rights reserved.

Agenda

Why do we need Galvanic Isolation

Coreless Transformer Technology

Isolated Gate Drivers Highlight

4 Infineon Gate Drivers at a glance

5 Training and support material available

Copyright © Infineon Technologies AG 2021. All rights reserved.

EiceDRIVER™ isolated gate driver portfolio – X3 Analog (1ED34xx) & X3 Digital (1ED38xx) positioning

Enhanced series

Compact series

X3

Enhanced products
(1ED-F2 / 2ED-F2 / 2ED-FI / 1ED-SRC)

Compact products
(1ED Compact / X3 Compact)

X3
- **Highly flexible based on configurability**
  - I2C configurable (X3 Digital)
  - Resistor adjustable (X3 Analog)
- **Highest isolation standards**
  - UL1577 and VDE-11

Rich protection feature-set
- **Active Miller clamp**
- **DESAT protection**
- **Slew rate control**

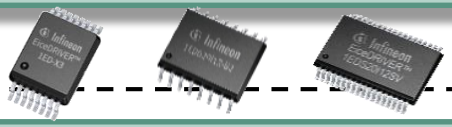

Easy to design-in
- **Cost-sensitive solutions**
- **Limited feature-set**

X3 Analog & Digital – Enabling high-end gate driver solutions based on **configurability**

X3 Compact – The next generation single-channel easy to design-in isolated gate driver family

Copyright © Infineon Technologies AG 2021. All rights reserved.

EiceDRIVER™ X3 Compact (1ED31xx) family

5.7 kV isolated driver with active Miller clamp or separate output

Product highlights

- Single channel isolated gate driver with **5.5 / 10 / 14 A** (no booster required)
- Galvanic functional isolation voltages up to **2300 V**
- **90 ns** propagation delay with **30 ns** input filter, **7 ns** propagation delay matching
- **Active Miller Clamp or Separate outputs**
- Exceptional CMTI robustness > **200 kV/µs**
- **40 V absolute maximum** output supply voltage
- Isolation capabilities & certification

  1ED31xxM**U**12F: **UL 1577 certified V_{ISO}=3 kV(rms)**
  1ED31xxM**U**12H: **UL 1577 certified V_{ISO}=5.7 kV(rms)**
  1ED31xxM**C**12H: **UL 1577 & VDE 0884-11 certified V_{IORM}=1767 V**

  DSO-8 150 mil (4 mm creepage) & 300 mil package (8 mm creepage)
- **Evaluation board available:**
  EVAL-1ED3121MX12H; EVAL-1ED3122MX12H; EVAL-1ED3124MX12H
  REF-22K-GPD-INV-EASY3B

www.Infineon.com/gdcompact

Typical Applications

Sample schematic

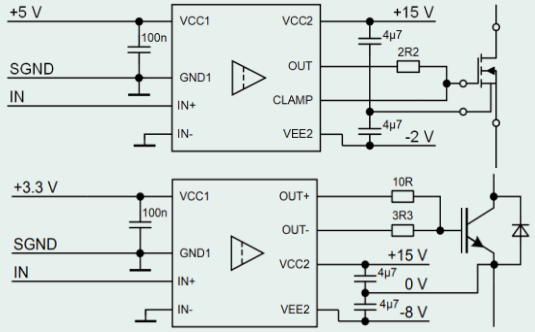

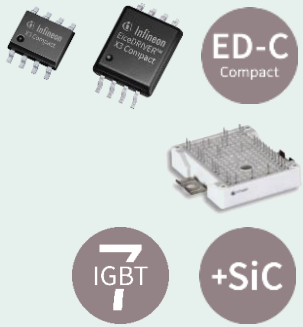

Value proposition

- **Cost effective 8-pin** gate driver (with **150-mil and 300-mil** bodies) enabling **easy to design-in**
- **14 A driving capability & 40 V output supply voltage range**
- **Optimized specifications** for driving **SiC**
- Fulfilling **highest isolation standards**
  - UL1577 and VDE-11 (planned)

Copyright © Infineon Technologies AG 2021. All rights reserved. Infineon Proprietary

EiceDRIVER™ Enhanced X3 Analog (1ED34xx) family

5.7 kV isolated driver with Active Miller clamp, adjustable DESAT and soft-off

Product highlights

- Single channel isolated gate driver with **3 / 6 / 9 A**
- Galvanic functional isolation voltages up to **2300 V**
- Active Miller clamp (clamp driver), DESAT, soft-off, Thermal shutdown
- Exceptional CMTI robustness > **200 kV/µs**
- **X3 Analog configurability**
  - Adjustable **DESAT filter time & blanking time** and **soft-off current** with external resistor
- Isolation capabilities & certification
  - 1ED34x1M**U**12M: **UL 1577 certified V_{ISO}=5.7 kV(rms)**
  - 1ED34x1M**C**12M: **UL 1577 & VDE 0884-11 certified V_{IORM}=1767 V (planned)**
- **DSO-16 fine pitch, 300-mil wide-body package (8 mm creepage)**
- For IGBTs, MOSFETs, CoolSiC™ SiC MOSFETs
- Evaluation board available:
  - EVAL-1ED3491MX12M www.Infineon.com/gdenhanced

Typical applications

Sample schematic

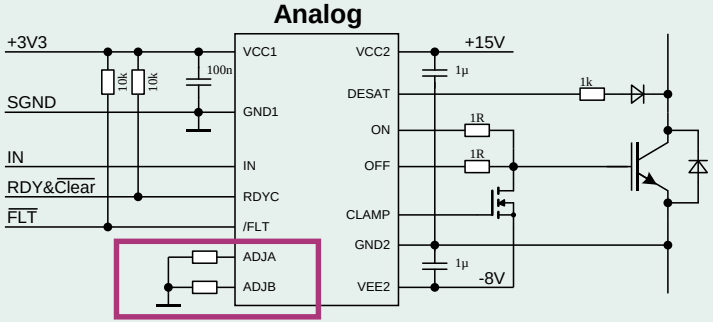

Value proposition

- **Flexibility** based on **resistor-based configuration** adjustments
- **Reduction in hardware complexity** with less customer product variants
- **Reduction in the evaluation time** with adjustable parameters for **faster time-to-market.**

Copyright © Infineon Technologies AG 2021. All rights reserved.

EiceDRIVER™ Enhanced X3 Digital (1ED38xx) family

5.7 kV isolated driver with I2C bus configurability for DESAT, soft-off, Miller clamp, UVLO, Soft-off

Product highlights

- Single channel isolated gate driver with **3 / 6 / 9 A**
- Galvanic functional isolation voltages up to **2300 V**
- Active Miller clamp (clamp driver), DESAT, soft-off, Thermal **monitoring** and shutdown
- Exceptional CMTI robustness > **200 kV/µs**
- **X3 Digital configurability**
  - **Full adjustable via I2C bus**: 3 address configuration, 27 parameter configuration, 16 status
  - **Configurable** UVLO, **DESAT²**, TLTO, Soft-off, Miller clamp
- Isolation capabilities & certification
  - 1ED38x0M**U**12M: **UL 1577 certified V_{ISO}=5.7 kV(rms)**
  - 1ED38x0M**C**12M: **UL 1577 & VDE 0884-11 certified V_{IORM}=1767 V (planned)**
- **DSO-16 fine pitch, 300-mil wide-body package (8 mm creepage)**
- For IGBTs, MOSFETs, CoolSiC™ SiC MOSFETs

www.Infineon.com/gdenhanced

Typical applications

Sample schematic

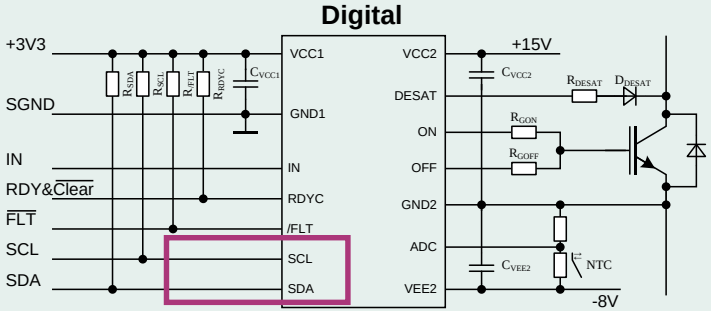

Value proposition

- **Highest flexibility** introduced by **register-based adjustments via I2C**
- **Reduction in hardware complexity** with less customer product variants
- **Reduction in the evaluation time** with adjustable parameters for **faster time-to-market.**

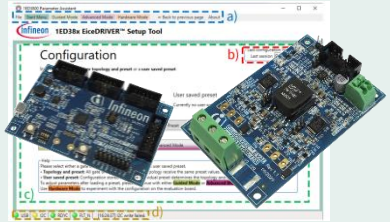

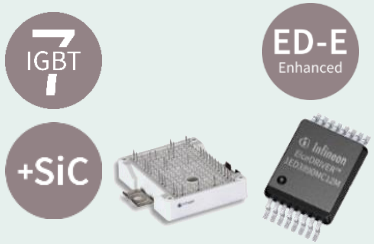

Copyright © Infineon Technologies AG 2021. All rights reserved.

EiceDRIVER™ X3 (1ED34xx/1ED38xx) – Configuration possibilities of X3 Analog & Digital

Feature	X3 Digital (1ED38xx) default	X3 Digital (1ED38xx) Register adjustable	X3 Analog (1ED34xx) Resistor adjustable
Clamp and pin status monitoring filter time	235 ns	7 steps 105 ns … 370 ns	235 ns
Clamp and pin status monitoring filter type	Up-reset	up-reset or up-down	Up-reset
Clamp pin	Clamp	ADC, clamp, clamp-driver, or none	Clamp (3 A), Clamp-driver (6 / 9 A)
DESAT filter time (D1/D2)	225 ns	D1/D2 31 steps 75 ns … 5975 ns	D1: 225 ns or 8 steps 1575 ns to 3975 ns
DESAT filter type (D1/D2)	Up-reset	D1/D2: up-reset or up-down	Up-reset
DESAT leading edge blanking	400 ns	64 steps 100 ns … 3300 ns	400 ns, 650 ns, or 1150 ns
DESAT threshold (D1/D2)	9.18 V	D1/D2: 32 steps 1.85 V to 9.18 V	D1: 9.18 V
DESAT2 specifics	disabled	Event limits and decrements	n.a.
Fault clear method	RDYC	RDYC low cycle or self clear timer	RDYC
Fault clear self clear times	n.a.	400/1600 µs	n.a.
Fault turn-off method	Soft-off	hard switch-off, TLTOff, or Soft-off	Soft-off
Normal turn-off method	hard switch-off	hard switch-off or TLTOff	hard switch-off
Soft-off (3 A)	146 mA (3A)	16 steps 15 mA to 233 mA	16 steps 15 mA to 233 mA
Soft-off (6 A)	291 mA (6A)	16 steps 29 mA to 466 mA	16 steps 29 mA to 466 mA
Soft-off (9 A)	437 mA (9A)	16 steps 44 mA to 699 mA	16 steps 44 mA to 699 mA
Switch-off timeout monitoring	disabled	8 steps 200 ns to 3200 ns	n.a.
TLTOff	n.a.	Ramp A: 4 steps 7.5 V/µs to 60 V/µs Level: 32 steps 4.25 V to 12 V Duration: 32 steps 0 to 7.75 µs Ramp B: 5 steps 7.5 V/µs to hard switch-off	n.a.
VCC1 UVLO	3.0 V / 2.6 V	3.0 V / 2.6 V	3.0 V / 2.6 V
VCC2 UVLO	12.6 V for IGBT	10 V or 12.6 V; soft UVLO 16 steps 9.5 V to 17 V	12.6 V
VEE2 UVLO	off	off, -3 V, -6 V, or -12 V; soft UVLO 16 steps -2.0 V to -17.0 V	off

Copyright © Infineon Technologies AG 2021. All rights reserved.

Functional vs reinforced isolation – Functional isolation vs. reinforced isolation terms

Functional isolation

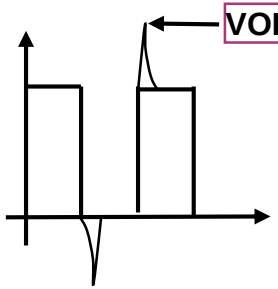

Voltage class (power switch)	EiceDRIVER™ X3
1200 V	✓
1700 V	✓
2000 V	✓
2300 V	✓

Reinforced isolation

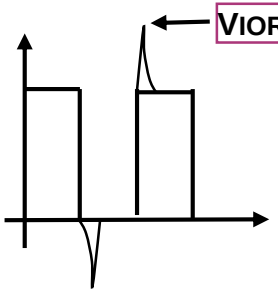

Voltage class (power switch)	EiceDRIVER™ X3
1200 V	✓
1700 V	✓

› EiceDRIVER™ X3 datasheet entries
- Functional isolation
- Reinforced isolation

Input to output offset voltage	**VOFFSET**	**-**	**2300**	**V**
Max. repetitive insulation voltage	**VIORM**	**-**	**1767**	**V (peak)**

Copyright © Infineon Technologies AG 2021. All rights reserved.

Functional vs reinforced isolation – **Infineon's** functional, UL 1577 vs. VDE-11 (reinforced isolation)

Functional isolation

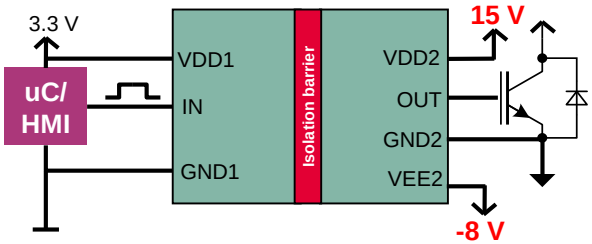

- Independent supplies ✓
- Ground shift immunity ✓
- Safe isolation barrier ✓

X3 UL 1577 certified

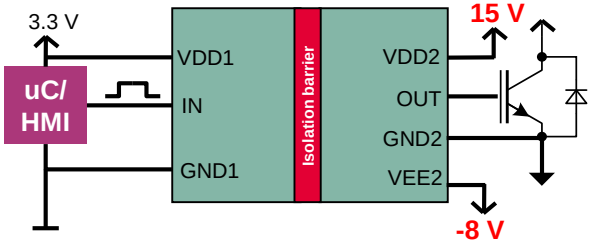

- Independent supplies ✓
- Ground shift immunity ✓
- Safe isolation barrier ✓
- UL 1577 certification ✓
  - Withstands 5.7 kV(rms) overvoltage test

X3 VDE-11 certified (Reinforced isolation)

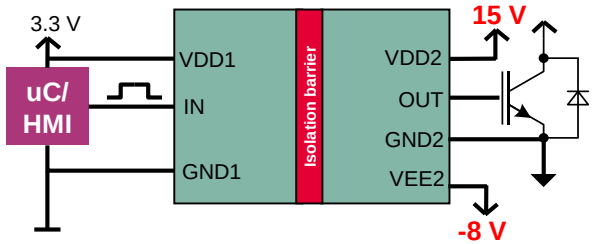

- Independent supplies ✓
- Ground shift immunity ✓
- Safe isolation barrier ✓
- UL 1577 certification ✓
- VDE 0884-11 certification ✓
  - Isolation lifetime of 37.5yrs

Copyright © Infineon Technologies AG 2021. All rights reserved.

Agenda

Why do we need Galvanic Isolation

Coreless Transformer Technology

Isolated Gate Drivers Highlight

4 Infineon Gate Drivers at a glance

5 Training and support material available

Copyright © Infineon Technologies AG 2021. All rights reserved.

Infineon drivers are offered across a wide variety of configurations and voltage ranges

Non-isolated GD	Level-shift GD	Isolated GD
Low voltage	Junction isolation (JI) & silicon-on-insulator (SOI)	Coreless transformer

Gate driver configuration			5 V	25 V	100 V	200 V	500 V	600 V	650 V	1200 V
Gate drivers	1-channel	High-side			JI	JI	JI	JI	CT	CT
		Low-side	N-ISO	N-ISO						
	2-channel	High-side							CT	CT
		Low-side		N-ISO						
		High-side + low-side				JI	JI	JI, SOI	SOI	JI
		Half-bridge			JI	JI		JI, SOI	CT, SOI	JI, CT
	4-channel	Full bridge			JI					
	6-channel	Three-phase				SOI		JI, SOI		JI, SOI
System building blocks		Current sense						JI		
		Start-up					JI			

- Non-isolated (N-ISO)
- Junction isolation (JI)
- Silicon-on-insulator (SOI)
- Coreless transformer (CT)

Copyright © Infineon Technologies AG 2021. All rights reserved.

PL67 product segmentation – Home Appliance+ (**HA+**)
Multiple Consumer and Industrial applications from 10 W to 15 kW

HA+

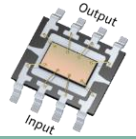

- **Low-side:**
  - Comprehensive families of single and dual channel low-side drivers
  - New families with **strong gate drive**, high speed, and **rugged** operation

	Target markets	2020	2021
Low-side Drivers	› PFC (e.g. MHA RAC) › SMPS, Sync. Rect. › Gate drive boosters	› **1ED44173/5/6N** (single 2.5 A, OCP) › **2ED24427N** (Dual 10 A, Power DSO-8 package)	

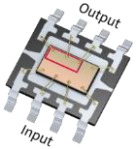

- **Level-shift:**
  - **30 years** of product leadership from IRF portfolio (first **HVIC** driver in 1989) - largest standard portfolio in the industry
  - State-of-the-art **Infineon SOI** technology since 1998 with integrated BSD, high ruggedness operation (-VS), lower level-shift losses for ~500 kHz f_{SW}

200 V Level-shift Drivers	› Battery powered apps › SLEV/LEV › Stepper motors › SHA		› **6ED2742S** (1A/2A 3-ph driver, BSD, CSA, PMU/CP, OCP, RFE TCP, 5x5 mm QFN32)
600 - 700 V Level-shift Drivers	› MHA & SHA › GPD › eMobility (LEV) › Lighting	› **2ED2106/8/9xS** (300/700mA, HB, HS+LS) › **2ED2181/2/3/4xS** (2.5/2.5 A HB, HS+LS) › **2ED28073J06** (high-Ohmic CoolMOS™ GD for HA motor-drive applications)	› **2ED2101/3/4S06** (90 ns t_{PROP} fast level shift (FLS) design, low-current) › **2ED2110S06** (FLS design, high-current) › **2ED24G00J06** (190 mΩ GaN motor driver)
1200 V Level-shift Drivers	› Mid-power 2-10 kW GPD & industrial drives › CAC	› **6ED2230S12T** (3-ph drv, integrated BSD, OCP, DSO-24)	› **6ED2231S12T** (6ED2230 3-ph driver mod with symmetrical UVLOs for IGBT)
High-side and Support ICs	› Forklift / LSEV › SMPS (Buck converters)		

BOLD = New Released Products **BOLD** = In development / Coming Soon

Copyright © Infineon Technologies AG 2021. All rights reserved.

PL67 product segmentation – Industrial+ (**IND+**)
Multiple applications from 100 W to 100 kW

IND+

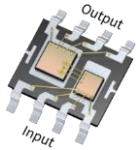

- **Galvanically Isolated**:
  - Magnetically-coupled **core-less transformer (CT)** isolation technology
  - Leadership in **first non-opto** industrial isolated gate drivers since 2003

	Target markets	2020	2021
Isolated Gate Drivers – Compact	› Drives › Solar › UPS, EV Charging	› **1ED31xxM Compact** (X3C, UL-1577, DSO-8 150-mil / 300-mil, 2 + 6 variants) › **1ED31xxM Compact** (X3C, VDE0884-11, DSO-8 300-mil, 6 variants)	› **1ED32xxM** (2LSRC, slew-rate control, VDE0884-11, DSO-8 300-mil, 4 variants) › **1ED31xxMC12x** (X3C w/ 12+ V SiC UVLO, 4 variants)
Isolated Gate Drivers - Enhanced	› Drives › Solar, Welding › UPS, EV Charging	› **1ED34xxM** (X3 Analog configurable, UL-1577/VDE0884-11, DSO-16, 6 variants) › **1ED38xxM** (X3 Digital I^2C configurable, UL-1577/VDE0884-11, DSO-16, 6 variants)	› **1ED332xM** (F3, UL-1577/VDE0884-11, ±6A,Desat, Miller Clamp, Softoff, DSO-16 300-mil, CoolSiC™ ready, 4 variants)

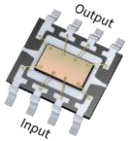

- **Power Supply ICs:**
  - **Integrated-switch** low-power bias generators with **accurate & flexible** output voltage setting
  - "Every Isolated Gate Driver Needs A Power Supply"

Power Supply ICs	› Industrial Drives › Solar › SMPS		› **2EP1xxG/R** (Bias power transformer drv, proprietary open-loop accurate Vout adjustment, TSSOP-8 & VDSON-8)

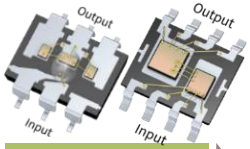

- **Solid-State Relays and Isolators:**
  - **Optically isolated technology** provides galvanic isolation for safety applications. **Established** and reliable products with over 20 years of history.
  - **New generation CT-based** isolators and relays in development.
  - **Wide range of applications** from industrial automation to test and measurement equipment.

Solid-State Relays and Isolators	› Industrial Drives - PLC › Test equipment › Safety protection		

BOLD = New Released Products **BOLD** = In development / Coming Soon

Copyright © Infineon Technologies AG 2021. All rights reserved.

Infineon gate drivers portfolio & roadmap
All products are sampling

- Coreless Transformer (CT)
- Silicon On Insulator (SOI)
- Non-isolated (N-ISO)
- Junction Isolation (JI)

HA+

Level Shift 1200 V

6ED2230S12T
- 1200 V, 0.65 A
- 3-phase **SOI** gate driver, DSO-24
- **Integrated Bootstrap diode, overcurrent protection**

6ED2231S12T
- 1200 V, 0.65 A
- 3-phase **SOI** gate driver, DSO-24
- **Integrated BSD, OCP, Symmetrical UVLO**

Level Shift 650 V

2ED2181/2/3/4xS06
- 650 V, **2.5 A, 200 ns**
- HB **SOI** gate driver, DSO8/14
- **Integrated Bootstrap diode**

2ED2106/8/9/91xS06
- 650 V, **0.7 A, 200 ns**
- HB **SOI** gate driver, DSO8/14
- **Integrated Bootstrap diode**

2ED28073J06F
- 600 V, **0.08 A**
- Half bridge driver for **CoolMOS™ PFD7**
- Bootstrap FET, DSO8

Fast Level Shift Family

2ED2101/03/04 Q1/21
- 650 V, **0.6 A, 100 ns**
- HB **SOI** gate driver, DSO8
- **Integrated Bootstrap diode**

2ED2110
- 650 V, **2.5 A, 100 ns**
- HB **SOI** gate driver, DSO16
- **Integrated Bootstrap diode**

2ED2388 2021
- 650 V, **0.6 A, 100 ns**
- HB **SOI** gate driver, DSO8
- **Int. BSD, 2ED2304/L6388 pinout**

Non-isolated (Low-side)

1ED44176
- 25 V, 1.75 A
- Single low side driver, DSO8
- **Positive-CS OCP**, FLT, EN

1ED44173/5
- 25 V, 2.6 A, 8/11 V UVLO
- Single low side driver, SOT23-6
- **Negative-CS** OCP, FLT, EN

2ED24427
- 25 V, **Dual 10 A**
- Dual low side, **PSO8 with power pad**

Industrial+

Isolated

1ED34xxMU12M Q4/20
5700 Vrms, 3 / 6 / 9 A, **R-adj**,
DESAT, Soft off
DSO16 fine pitch 300 mil, **UL**

1ED38xxMU12M
5700 Vrms, 3 / 6 / 9 A, **I2C-adj**,
DESAT, Soft off, UVLO adj.
DSO16 fine pitch 300 mil, **UL**

1ED34xxMC12M Q1/21
5700 Vrms, 3 / 6 / 9 A, **R-adj**,
- DESAT, Soft off
- DSO16 fine pitch 300 mil, **VDE-11**

1ED38xxMC12M 2021
5700 Vrms, 3 / 6 / 9 A, **I2C-adj**,
- DESAT, Soft off, UVLO adj. etc.
- DSO16 fine pitch 300 mil, **VDE-11**

1ED31xxMU12H Q4/20
5700 Vrms, 5 / 10 / 14 A,
Miller clamp, or Separate outputs
DSO8 300 mil, **UL**

1ED3124/25MU12F
3000 Vrms, 10 / 14 A,
- Miller clamp / Sep-out
- DSO8 150 mil , **UL** Q1/21

1ED31xxMC12H
5700 Vrms, 5 / 10 / 14 A,
- Miller clamp, or Sep-out
- DSO8 300 mil , **VDE-11**

1ED32xxMC12H
(2L-SRC)
5700 Vrms, DSO8 300 mil ,
VDE-11 2021

Just Released 2019/2020

Upcoming 2020/21

Copyright © Infineon Technologies AG 2021. All rights reserved.

Agenda

Why do we need Galvanic Isolation

Coreless Transformer Technology

Isolated Gate Drivers Highlight

4 Infineon Gate Drivers at a glance

5 Training and support material available

Copyright © Infineon Technologies AG 2021. All rights reserved.

Training available

- EiceDRIVER™ Compact 1ED31xx (X3 Compact), single channel isolated driver with Miller clamp or Separate output
  - Presentation available
- EiceDRIVER™ Enhanced 1ED34xx (X3 Analog), single channel isolated driver with DESAT(adjustable filter time), soft-off(adjustable current)
  - Presentation available
- EiceDRIVER™ Enhanced 1ED38xx (X3 Digital), single channel isolated driver with I2C Configurability, fully adjustable DESAT, Miller clamp, soft-off, UVLO
  - Presentation available
- How to choose gate driver for SiC MOSFETs and SiC MOSFET modules
  - Presentation available
- How to choose gate driver for IGBT discrete and modules

Copyright © Infineon Technologies AG 2021. All rights reserved.

Application note available

- Advanced Gate Drive Options for Silicon Carbide (SiC) MOSFETs
- Technical Description - 1EDI/1EDC Compact 1200-V Single Channel Isolated Gate Driver Family
- Driving CoolGaN™ high electron mobility transistors with EiceDRIVER™ 1EDI Compact
- How to Choose External Booster for Gate Driver IC
- Selecting the Right Gate Resistor for Power Devices
- Obtaining Junction Temperature of Gate Driver by Using Thermal Coefficient Ψth(j-top)

For more information please goto www.Infineon.com/gdisolated

Copyright © Infineon Technologies AG 2021. All rights reserved.

Part of your life. Part of tomorrow.